§ 570.63 Wheel assemblies.

(a) *Wheel integrity*. A tire rim, wheel disc or spider shall have no visible cracks, elongated bolt holes, or indications of in-service repair by welding.

(1) *Inspection procedure*. Examine visually for the conditions indicated.

(b) *Cast wheels*. Cast wheels shall not be cracked or show evidence of excessive wear in the clamp area.

(1) *Inspection procedure*. Examine visually for the conditions indicated.

(c) *Mounting*. All wheel nuts shall be in place and tight.

(1) *Inspection procedure*. Check wheel retention for the conditions indicated.

PART 571—FEDERAL MOTOR VEHICLE SAFETY STANDARDS

Subpart A—General

Subpart B—Federal Motor Vehicle Safety Standards

AUTHORITY: 49 U.S.C. 322, 30111, 30115, 30166 and 30177; delegation of authority at 49 CFR 1.50.

EDITORIAL NOTE: Nomenclature changes to part 571 appear at 69 FR 18803, Apr. 9, 2004.

Subpart A—General

§571.1 Scope.

This part contains the Federal Motor Vehicle Safety Standards for motor vehicles and motor vehicle equipment established under section 103 of the National Traffic and Motor Vehicle Safety Act of 1966 (80 Stat. 718).

[33 FR 19703, Dec. 25, 1968. Redesignated at 35 FR 5118, Mar. 26, 1970]

§571.3 Definitions.

(a) *Statutory definitions.* All terms defined in section 102 of the Act are used in their statutory meaning.

(b) *Other definitions.* As used in this chapter—

Act means the National Traffic and Motor Vehicle Safety Act of 1966 (80 Stat. 718).

Approved, unless used with reference to another person, means approved by the Secretary.

Boat trailer means a trailer designed with cradle-type mountings to transport a boat and configured to permit launching of the boat from the rear of the trailer.

Bus means a motor vehicle with motive power, except a trailer, designed for carrying more than 10 persons.

Curb weight means the weight of a motor vehicle with standard equipment; maximum capacity of engine fuel, oil, and coolant; and, if so equipped, air conditioning and additional weight optional engine.

Designated seating capacity means the number of designated seating positions provided.

Designated seating position means any plan view location capable of accommodating a person at least as large as a 5th percentile adult female, if the overall seat configuration and design and vehicle design is such that the position is likely to be used as a seating position while the vehicle is in motion, except for auxiliary seating accommodations such as temporary or folding jump seats. Any bench or split-bench seat in a passenger car, truck or multipurpose passenger vehicle with a GVWR less than 4,536 kilograms (10,000 pounds), having greater than 127 centimeters (50 inches) of hip room (measured in accordance with SAE Standard J1100(a)) shall have not less than three designated seating positions, unless the seat design or vehicle design is such that the center position cannot be used for seating. For the sole purpose of determining the classification of any vehicle sold or introduced into interstate commerce for purposes that include carrying students to and from school or related events, any location in such vehicle intended for securement of an

occupied wheelchair during vehicle operation shall be regarded as four designated seating positions.

Driver means the occupant of a motor vehicle seated immediately behind the steering control system.

Emergency brake means a mechanism designed to stop a motor vehicle after a failure of the service brake system.

5th percentile adult female means a person possessing the dimensions and weight of the 5th percentile adult female specified for the total age group in Public Health Service Publication No. 1000, Series 11, No. 8, ''Weight, Height, and Selected Body Dimensions of Adults.''

Firefighting vehicle means a vehicle designed exclusively for the purpose of fighting fires.

Fixed collision barrier means a flat, vertical, unyielding surface with the following characteristics:

(1) The surface is sufficiently large that when struck by a tested vehicle, no portion of the vehicle projects or passes beyond the surface.

(2) The approach is a horizontal surface that is large enough for the vehicle to attain a stable attitude during its approach to the barrier, and that does not restrict vehicle motion during impact.

(3) When struck by a vehicle, the surface and its supporting structure absorb no significant portion of the vehicle's kinetic energy, so that a performance requirement described in terms of impact with a fixed collision barrier must be met no matter how small an amount of energy is absorbed by the barrier.

Forward control means a configuration in which more than half of the engine length is rearward of the foremost point of the windshield base and the steering wheel hub is in the forward quarter of the vehicle length.

Full trailer means a trailer, except a pole trailer, that is equipped with two or more axles that support the entire weight of the trailer.

Gross axle weight rating or *GAWR* means the value specified by the vehicle manufacturer as the load-carrying capacity of a single axle system, as measured at the tire-ground interfaces.

Gross combination weight rating or *GCWR* means the value specified by the manufacturer as the loaded weight of a combination vehicle.

Gross vehicle weight rating or *GVWR* means the value specified by the manufacturer as the loaded weight of a single vehicle.

H point means the mechanically hinged hip point of a manikin which simulates the actual pivot center of the human torso and thigh, described in SAE Recommended Practice J826, ''Manikins for Use in Defining Vehicle Seating Accommodations,'' November 1962.

Head impact area means all nonglazed surfaces of the interior of a vehicle that are statically contactable by a 6.5-inch diameter spherical head form of a measuring device having a pivot point to ''top-of-head'' dimension infinitely adjustable from 29 to 33 inches in accordance with the following procedure, or its graphic equivalent:

(a) At each designated seating position, place the pivot point of the measuring device—

(1) For seats that are adjustable fore and aft, at—

(i) The seating reference point; and

(ii) A point 5 inches horizontally forward of the seating reference point and vertically above the seating reference point an amount equal to the rise which results from a 5–inch forward adjustment of the seat or 0.75 inch; and

(2) For seats that are not adjustable fore and aft, at the seating reference point.

(b) With the pivot point to ''top-of-head'' dimension at each value allowed by the device and the interior dimensions of the vehicle, determine all contact points above the lower windshield glass line and forward of the seating reference point.

(c) With the head form at each contact point, and with the device in a vertical position if no contact points exists for a particular adjusted length, pivot the measuring device forward and downward through all arcs in vertical planes to 90° each side of the vertical longitudinal plane through the seating reference point, until the head form contacts an interior surface or until it is tangent to a horizontal plane 1 inch above the seating reference point, whichever occurs first.

Interior compartment door means any door in the interior of the vehicle installed by the manufacturer as a cover for storage space normally used for personal effects.

Longitudinal or *longitudinally* means parallel to the longitudinal centerline of the vehicle.

Low-speed vehicle (LSV) means a motor vehicle,

(1) That is 4-wheeled,

(2) Whose speed attainable in 1.6 km (1 mile) is more than 32 kilometers per hour (20 miles per hour) and not more than 40 kilometers per hour (25 miles per hour) on a paved level surface, and

(3) Whose GVWR is less than 1,361 kilograms (3,000 pounds).

Motorcycle means a motor vehicle with motive power having a seat or saddle for the use of the rider and designed to travel on not more than three wheels in contact with the ground.

Motor-driven cycle means a motorcycle with a motor that produces 5-brake horsepower or less.

Motor home means a multi-purpose vehicle with motive power that is designed to provide temporary residential accommodations, as evidenced by the presence of at least four of the following facilities: cooking; refrigeration or ice box; self-contained toilet; heating and/or air conditioning; a potable water supply system including a faucet and a sink; and a separate 110–125 volt electrical power supply and/or propane.

Multifunction school activity bus (MFSAB) means a school bus whose purposes do not include transporting students to and from home or school bus stops.

Multipurpose passenger vehicle means a motor vehicle with motive power, except a low-speed vehicle or trailer, designed to carry 10 persons or less which is constructed either on a truck chassis or with special features for occasional off-road operation.

Open-body type vehicle means a vehicle having no occupant compartment top or an occupant compartment top that can be installed or removed by the user at his convenience.

Outboard designated seating position means a designated seating position where a longitudinal vertical plane tangent to the outboard side of the seat cushion is less than 12 inches from the innermost point on the inside surface of the vehicle at a height between the design H-point and the shoulder reference point (as shown in fig. 1 of Federal Motor Vehicle Safety Standard No. 210) and longitudinally between the front and rear edges of the seat cushion.

Overall vehicle width means the nominal design dimension of the widest part of the vehicle, exclusive of signal lamps, marker lamps, outside rearview mirrors, flexible fender extensions, and mud flaps, determined with doors and windows closed and the wheels in the straight-ahead position.

Parking brake means a mechanism designed to prevent the movement of a stationary motor vehicle.

Passenger car means a motor vehicle with motive power, except a low-speed vehicle, multipurpose passenger vehicle, motorcycle, or trailer, designed for carrying 10 persons or less.

Pelvic impact area means that area of the door or body side panel adjacent to any outboard designated seating position which is bounded by horizontal planes 7 inches above and 4 inches below the seating reference point and vertical transverse planes 8 inches forward and 2 inches rearward of the seating reference point.

Pole trailer means a motor vehicle without motive power designed to be drawn by another motor vehicle and attached to the towing vehicle by means of a reach or pole, or by being boomed or otherwise secured to the towing vehicle, for transporting long or irregularly shaped loads such as poles, pipes, or structural members capable generally of sustaining themselves as beams between the supporting connections.

Recreation vehicle trailer means a trailer, except a trailer designed primarily to transport cargo, designed to be drawn by a vehicle with motive power by means of a bumper, frame or fifth wheel hitch and designed to provide temporary residential accommodations, as evidenced by the presence of at least four of the following facilities: cooking; refrigeration or ice box; self-contained toilet; heating and/or air conditioning; a potable water supply system including a faucet and a

sink; and a separate 110–125 volt electrical power supply and/or propane. ''Recreation vehicle trailer'' includes trailers used for personal purposes, commonly known as ''sport utility RVs'' or ''toy haulers,'' which usually have spacious rather than incidental living quarters and provide a cargo area for smaller items for personal use such as motorcycles, mountain bikes, all terrain vehicles (ATVs), snowmobiles, canoes or other types of recreational gear.

School bus means a bus that is sold, or introduced in interstate commerce, for purposes that include carrying students to and from school or related events, but does not include a bus designed and sold for operation as a common carrier in urban transportation.

Seating reference point (SgRP) means the unique design H-point, as defined in SAE J1100 (June 1984), which:

(a) Establishes the rearmost normal design driving or riding position of each designated seating position, which includes consideration of all modes of adjustment, horizontal, vertical, and tilt, in a vehicle;

(b) Has X, Y, and Z coordinates, as defined in SAE J1100 (June 1984), established relative to the designed vehicle structure;

(c) Simulates the position of the pivot center of the human torso and thigh; and

(d) Is the reference point employed to position the two-dimensional drafting template with the 95th percentile leg described in SAE J826 (May 1987), or, if the drafting template with the 95th percentile leg cannot be positioned in the seating position, is located with the seat in its most rearward adjustment position.

Semitrailer means a trailer, except a pole trailer, so constructed that a substantial part of its weight rests upon or is carried by another motor vehicle.

Service brake means the primary mechanism designed to stop a motor vehicle.

Speed attainable in 1 mile means the speed attainable by accelerating at maximum rate from a standing start for 1 mile, on a level surface.

Speed attainable in 2 miles means the speed attainable by accelerating at maximum rate from a standing start for 2 miles, on a level surface.

Torso line means the line connecting the ''H'' point and the shoulder reference point as defined in SAE Recommended Practice J787g, ''Motor Vehicle Seat Belt Anchorage,'' September 1966.

Trailer means a motor vehicle with or without motive power, designed for carrying persons or property and for being drawn by another motor vehicle.

Trailer converter dolly means a trailer chassis equipped with one or more axles, a lower half of a fifth wheel and a drawbar.

Truck means a motor vehicle with motive power, except a trailer, designed primarily for the transportation of property or special purpose equipment.

Truck tractor means a truck designed primarily for drawing other motor vehicles and not so constructed as to carry a load other than a part of the weight of the vehicle and the load so drawn.

Unloaded vehicle weight means the weight of a vehicle with maximum capacity of all fluids necessary for operation of the vehicle, but without cargo, occupants, or accessories that are ordinarily removed from the vehicle when they are not in use.

95th percentile adult male means a person possessing the dimensions and weight of the 95th percentile adult male specified in Public Health Service Publication No. 1000, Series 11, No. 8, ''Weight, Height, and Selected Body Dimensions of Adults.''

Vehicle fuel tank capacity means the tank's unusable capacity (i.e., the volume of fuel left at the bottom of the tank when the vehicle's fuel pump can no longer draw fuel from the tank) plus its usable capacity (i.e., the volume of fuel that can be pumped into the tank through the filler pipe with the vehicle on a level surface and with the unusable capacity already in the tank). The term does not include the vapor volume of the tank (i.e., the space above the fuel tank filler neck) nor the volume of the fuel tank filler neck.

[33 FR 19703, Dec. 25, 1968. Redesignated at 35 FR 5118, Mar. 26, 1970]

EDITORIAL NOTE: For FEDERAL REGISTER citations affecting § 571.3, see the List of CFR

Sections Affected, which appears in the Finding Aids section of the printed volume and on GPO Access.

§571.4 Explanation of usage.

The word *any*, used in connection with a range of values or set of items in the requirements, conditions, and procedures of the standards or regulations in this chapter, means generally the totality of the items or values, any one of which may be selected by the Administration for testing, except where clearly specified otherwise.

Examples: ''The vehicle shall meet the requirements of S4.1 when tested at any point between 18 and 22 inches above the ground.'' This means that the vehicle must be capable of meeting the specified requirements at every point between 18 and 22 inches above the ground. The test in question for a given vehicle may call for a single test (a single impact, for example), but the vehicle must meet the requirement at whatever point the Administration selects, within the specified range.

''Each tire shall be capable of meeting the requirements of this standard when mounted on any rim specified by the manufacturer as suitable for use with that tire.'' This means that, where the manufacturer specifies more than one rim as suitable for use with a tire, the tire must meet the requirements with whatever rim the Administration selects from the specified group.

''Any one of the items listed below may, at the option of the manufacturer, be substituted for the hardware specified in S4.1.'' Here the wording clearly indicates that the selection of items is at the manufacturer's option.

[36 FR 2511, Feb. 5, 1971]

§571.5 Matter incorporated by reference.

(a) *Incorporation*. There are hereby incorporated, by reference, into this part, all materials referred to in any standard in subpart B of this part that are not set forth in full in the standard. These materials are thereby made part of this regulation. The Director of the Federal Register has approved the materials incorporated by reference. For materials subject to change, only the specific version approved by the Director of the Federal Register and specified in the standard are incorporated. A notice of any change in these materials will be published in the FEDERAL REGISTER. As a convenience to the reader, the materials incorporated by reference are listed in the Finding Aid Table found at the end of this volume of the Code of Federal Regulations.

(b) *Availability*. The materials incorporated by reference, other than acts of Congress and matter published elsewhere in the FEDERAL REGISTER, are available as follows:

(1) *Standards of the Society of Automotive Engineers* (*SAE*). They are published by the Society of Automotive Engineers, Inc. Information and copies may be obtained by writing to: Society of Automotive Engineers, Inc., 400 Commonwealth Drive, Warrendale, Pennsylvania 15096.

(2) *Standards of the American Society for Testing and Materials (ASTM)*. They are published by the American Society for Testing and Materials. Information and copies may be obtained by writing to: ASTM International, 100 Barr Harbor Drive, PO Box C700, West Conshohocken, PA 19428–2959.

(3) *Standards of the American National Standards Institute (ANSI)*. They are published by the American National Standards Institute. Information and copies may be obtained by writing to: RESNA, 1700 North Moore St., Suite 1540, Arlington, VA 22209–1903.

(4) *Data on the Weight Height and Selected Body Dimensions of Adults*. They are published by the National Center for Health Statistics, Centers for Disease Control (CDC). Information and copies may be obtained on the CDC web site at *http://www.cdc.gov/nchs* or by writing to National Division for Health Statistics, Division of Data Services, Hyattsville, MD 20782–2003.

(5) *Test Methods of the American Association of Textile Chemists and Colorists (AATCC)*. They are published by the American Association of Textile Chemists and Colorists. Information and copies may be obtained by writing to: AATCC, 1 Davis Dr., P.O. Box 12215, Research Triangle Park, NC 27709.

(6) *Test methods of the Illuminating Engineering Society of North America (IES)*. They are published by the Illuminating Engineering Society of North America. Information and copies may be obtained by writing to: IES, 120 Wall St., 7th Floor, New York, NY 10005.

(7) *Standards of Suppliers of Advanced Composite Materials Association*

(SACMA). They are published by Suppliers of Advanced Composite Materials Association. Information and copies may be obtained by writing to: Suppliers of Advanced Composite Materials Association, 1600 Wilson Blvd., Suite 1008, Arlington, VA 22209.

(8) *Standards of the American Society of Mechanical Engineers (ASME)*. They are published by the American Society of Mechanical Engineers. Information and copies may be obtained by writing to: ASME, 22 Law Drive, P.O. Box 2900, Fairfield, NJ 07007–2900.

(9) *Regulations of the United Nations Economic Commission for Europe (ECE)*. They are published by the United Nations. Information and copies may be obtained by writing to: United Nations, Conference Services Division, Distribution and Sales Section, Office C.115–1, Palais des Nations, CH–1211, Geneva 10, Switzerland. Copies of Regulations also are available on the ECE internet web site: *www.unece.org/trans/main/wp29/wp29regs.html*.

(10) *Child Restraint Systems Seat Assembly Drawing Package*. Copies may be obtained by contacting: Leet-Melbrook, 18810 Woodfield Road, Gaithersburg, MD, 20879, telephone (301) 670–0090.

(11) All of the above materials, as well as any other materials incorporated by reference, are available for inspection and copying at the Office of Vehicle Safety Standards, National Highway Traffic Safety Administration, 400 Seventh Street, SW., Washington, DC 20590. The materials are also available for inspection and copying at the National Archives and Records Administration (NARA). For information on the availability of this material at NARA, call 202–741–6030, or go to: *http://www.archives.gov/federal_register/code_of_federal_regulations/ibr_locations.html*.

[33 FR 19704, Dec. 25, 1968. Redesignated at 35 FR 5118, Mar. 26, 1970, and amended at 35 FR 5120, Mar. 26, 1970; 36 FR 1148, Jan. 23, 1971; 41 FR 52880, Dec. 2, 1976; 41 FR 56812, Dec. 30, 1976; 47 FR 7254, Feb. 18, 1982; 48 FR 30141, June 30, 1983; 54 FR 20083, May 9, 1989; 59 FR 49021, Sept. 26, 1994; 60 FR 37843, July 24, 1995; 64 FR 45898, Aug. 23, 1999; 67 FR 77193, Dec. 17, 2002; 68 FR 37654, June 24, 2003]

§ 571.7 Applicability.

(a) *General*. Except as provided in paragraphs (c) and (d) of this section, each standard set forth in subpart B of this part applies according to its terms to all motor vehicles or items of motor vehicle equipment the manufacture of which is completed on or after the effective date of the standard.

(b) [Reserved]

(c) *Military vehicles*. No standard applies to a vehicle or item of equipment manufactured for, and sold directly to, the Armed Forces of the United States in conformity with contractual specifications.

(d) *Export*. No standard applies to a vehicle or item of equipment in the circumstances provided in section 108(b)(5) of the Act (15 U.S.C. 1397 (b)(5)).

(e) *Combining new and used components*. When a new cab is used in the assembly of a truck, the truck will be considered newly manufactured for purposes of paragraph (a) of this section, the application of the requirements of this chapter, and the Act, unless the engine, transmission, and drive axle(s) (as a minimum) of the assembled vehicle are not new, and at least two of these components were taken from the same vehicle.

(f) *Combining new and used components in trailer manufacture*. When new materials are used in the assembly of a trailer, the trailer will be considered newly manufactured for purposes of paragraph (a) of this section, the application of the requirements of this chapter, and the Act, unless, at a minimum, the trailer running gear assembly (axle(s), wheels, braking and suspension) is not new, and was taken from an existing trailer—

(1) Whose identity is continued in the reassembled vehicle with respect to the Vehicle Identification Number; and

(2) That is owned or leased by the user of the reassembled vehicle.

[33 FR 19703, Dec. 25, 1968. Redesignated at 35 FR 5118, Mar. 26, 1970, and amended at 36 FR 7855, Apr. 27, 1971; 38 FR 12808, May 16, 1973; 40 FR 49341, Oct. 22, 1975; 41 FR 27074, July 1, 1976]

§ 571.8 Effective date.

(a) *Firefighting vehicles*. Notwithstanding the effective date provisions

of the motor vehicle safety standards in this part, the effective date of any standard or amendment of a standard issued after September 1, 1971, to which firefighting vehicles must conform shall be, with respect to such vehicles, either 2 years after the date on which such standard or amendment is published in the rules and regulations section of the FEDERAL REGISTER, or the effective date specified in the notice, whichever is later, except as such standard or amendment may otherwise specifically provide with respect to firefighting vehicles.

(b) *Vehicles built in two or more stages vehicles and altered vehicles.* Unless Congress directs or the agency expressly determines that this paragraph does not apply, the date for manufacturer certification of compliance with any standard, or amendment to a standard, that is issued on or after September 1, 2006 is, insofar as its application to intermediate and final-stage manufacturers and alterers is concerned, one year after the last applicable date for manufacturer certification of compliance. Nothing in this provision shall be construed as prohibiting earlier compliance with the standard or amendment or as precluding NHTSA from extending a compliance effective date for intermediate and final-stage manufacturers and alterers by more than one year.

[70 FR 7435, Feb. 14, 2005]

§571.9 Separability.

If any standard established in this part or its application to any person or circumstance is held invalid, the remainder of the part and the application of that standard to other persons or circumstances is not affected thereby.

[33 FR 19705, Dec. 25, 1968. Redesignated at 35 FR 5118, Mar. 26, 1970]

Subpart B—Federal Motor Vehicle Safety Standards

SOURCE: 36 FR 22902, Dec. 2, 1971, unless otherwise noted.

§571.101 Standard No. 101; Controls and displays.

S1. *Scope.* This standard specifies performance requirements for location, identification, color, and illumination of motor vehicle controls, telltales and indicators.

S2. *Purpose.* The purpose of this standard is to ensure the accessibility, visibility and recognition of motor vehicle controls, telltales and indicators, and to facilitate the proper selection of controls under daylight and nighttime conditions, in order to reduce the safety hazards caused by the diversion of the driver's attention from the driving task, and by mistakes in selecting controls.

S3. *Application.* This standard applies to passenger cars, multipurpose passenger vehicles, trucks, and buses.

S4. *Definitions.*

Adjacent, with respect to a control, telltale or indicator, and its identifier means:

(a) The identifier is in close proximity to the control, telltale or indicator; and

(b) No other control, telltale, indicator, identifier or source of illumination appears between the identifier and the telltale, indicator, or control that the identifier identifies.

Common space means an area on which more than one telltale, indicator, identifier, or other message may be displayed, but not simultaneously.

Control means the hand-operated part of a device that enables the driver to change the state or functioning of the vehicle or a vehicle subsystem.

Indicator means a device that shows the magnitude of the physical characteristics that the instrument is designed to sense.

Identifier means a symbol, word, or words used to identify a control, telltale, or indicator.

Multi-function control means a control through which the driver may select, and affect the operation of, more than one vehicle function.

Multi-task display means a display on which more than one message can be shown simultaneously.

Telltale means an optical signal that, when illuminated, indicates the actuation of a device, a correct or improper functioning or condition, or a failure to function.

S5. *Requirements.* Each passenger car, multipurpose passenger vehicle, truck and bus that is fitted with a control, a telltale or an indicator listed in Table

1965, except that the reference to ''the effective wipe pattern defined in SAE J903, paragraph 3.1.2'' in paragraph 3.1 of SAE Recommended Practice J942 shall be deleted and ''the pattern designed by the manufacturer for the windshield wiping system on the exterior surface of the windshield glazing'' shall be inserted in lieu thereof.

[36 FR 22902, Dec. 2, 1971, as amended at 58 FR 13023, Mar. 9, 1993; 60 FR 13643, Mar. 14, 1995; 63 FR 51000, Sept. 24, 1998]

§571.105 Standard No. 105; Hydraulic and electric brake systems.

S1. *Scope*. This standard specifies requirements for hydraulic and electric service brake systems, and associated parking brake systems.

S2. *Purpose*. The purpose of this standard is to insure safe braking performance under normal and emergency conditions.

S3. *Application*. This standard applies to multi-purpose passenger vehicles, trucks, and buses with a GVWR greater than 3,500 kilograms (7,716 pounds) that are equipped with hydraulic or electric brake systems.

S4. *Definitions*.

Antilock brake system or *ABS* means a portion of a service brake system that automatically controls the degree of rotational wheel slip during braking by:

(1) Sensing the rate of angular rotation of the wheels;

(2) Transmitting signals regarding the rate of wheel angular rotation to one or more controlling devices which interpret those signals and generate responsive controlling output signals; and

(3) Transmitting those controlling signals to one or more modulators which adjust brake actuating forces in response to those signals.

Backup system means a portion of a service brake system, such as a pump, that automatically supplies energy, in the event of a primary brake power source failure.

Brake power assist unit means a device installed in a hydraulic brake system that reduces the operator effort required to actuate the system, and that if inoperative does not prevent the operator from braking the vehicle by a continued application of muscular force on the service brake control.

Brake power unit means a device installed in a brake system that provides the energy required to actuate the brakes, either directly or indirectly through an auxiliary device, with the operator action consisting only of modulating the energy application level.

Directly Controlled Wheel means a wheel for which the degree of rotational wheel slip is sensed, either at that wheel or on the axle shaft for that wheel and corresponding signals are transmitted to one or more modulators that adjust the brake actuating forces at that wheel. Each modulator may also adjust the brake actuating forces at other wheels that are on the same axle or in the same axle set in response to the same signal or signals.

Electric vehicle or *EV* means a motor vehicle that is powered by an electric motor drawing current from rechargeable storage batteries, fuel cells, or other portable sources of electrical current, and which may include a nonelectrical source of power designed to charge batteries and components thereof.

Electrically-actuated service brakes means service brakes that utilize electrical energy to actuate the foundation brakes.

Full brake application means a brake application in which the force on the brake pedal reaches 150 pounds within 0.3 seconds from the point of application of force to the brake control.

Hydraulic brake system means a system that uses hydraulic fluid as a medium for transmitting force from a service brake control to the service brake, and that may incorporate a brake power assist unit, or a brake power unit.

Indirectly Controlled Wheel means a wheel at which the degree of rotational wheel slip is not sensed, but at which the modulator of an antilock braking system adjusts its brake actuating forces in response to signals from one or more sensed wheels.

Initial brake temperature means the average temperature of the service brakes on the hottest axle of the vehicle 0.2 mi before any brake application.

Lightly loaded vehicle weight means:

(a) For vehicles with a GVWR of 10,000 lbs. or less, unloaded vehicle weight plus 400 lbs. (including driver and instrumentation);

(b) For vehicles with a GVWR greater than 10,000 lbs., unloaded vehicle weight plus 500 lbs. (including driver and instrumentation).

Maximum drive-through speed means the highest possible constant speed at which the vehicle can be driven through 200 feet of a 500-foot radius curve arc without leaving the 12-foot lane.

Parking mechanism means a component or subsystem of the drive train that locks the drive train when the transmission control is placed in a parking or other gear position and the ignition key is removed.

Peak friction coefficient or *PFC* means the ratio of the maximum value of braking test wheel longitudinal force to the simultaneous vertical force occurring prior to wheel lockup, as the braking torque is progressively increased.

Pressure component means a brake system component that contains the brake system fluid and controls or senses the fluid pressure.

Regenerative braking system or *RBS* means an electrical energy system that is installed in an EV for recovering or dissipating kinetic energy, and which uses the propulsion motor(s) as a retarder for partial braking of the EV while returning electrical energy to the propulsion batteries or dissipating electrical energy.

Skid number means the frictional resistance of a pavement measured in accordance with American Society for Testing and Materials (ASTM) Method E–274–70 (as revised July, 1974) at 40 mph, omitting water delivery as specified in paragraphs 7.1 and 7.2 of that method.

Snub means the braking deceleration of a vehicle from a higher reference speed to a lower reference speed that is greater than zero.

Spike stop means a stop resulting from the application of 200 lbs of force on the service brake control in 0.08 s.

Split service brake system means a brake system consisting of two or more subsystems actuated by a single control, designed so that a single failure in any subsystem (such as a leakage-type failure of a pressure component of a hydraulic subsystem except structural failure of a housing that is common to two or more subsystems, or an electrical failure in an electric subsystem) does not impair the operation of any other subsystem.

Stopping distance means the distance traveled by a vehicle from the point of application of force to the brake control to the point at which the vehicle reaches a full stop.

Tandem axle means a group of two or more axles placed in close arrangement one behind the other with the center lines of adjacent axles not more than 72 inches apart.

Variable proportioning brake system means a system that automatically adjusts the braking force at the axles to compensate for vehicle static axle loading and/or dynamic weight transfer between axles during deceleration.

Wheel lockup means 100 percent wheel slip.

S5. *Requirements.*

S5.1 *Service brake systems.* Each vehicle must be equipped with a service brake system acting on all wheels. Wear of the service brake must be compensated for by means of a system of automatic adjustment. Each passenger car and each multipurpose passenger vehicle, truck, and bus with a GVWR of 10,000 pounds or less must be capable of meeting the requirements of S5.1.1 through S5.1.6 under the conditions prescribed in S6, when tested according to the procedures and in the sequence set forth in S7. Each school bus with a GVWR greater than 10,000 pounds must be capable of meeting the requirements of S5.1.1 through S5.1.5, and S5.1.7 under the conditions specified in S6, when tested according to the procedures and in the sequence set forth in S7. Each multipurpose passenger vehicle, truck and bus (other than a school bus) with a GVWR greater than 10,000 pounds must be capable of meeting the requirements of S5.1.1, S5.1.2, S5.1.3, and S5.1.7 under the conditions specified in S6, when tested according to the procedures and in the sequence set forth in S7. Except as noted in S5.1.1.2 and S5.1.1.4, if a vehicle is incapable of attaining a speed specified in S5.1.1, S5.1.2, S5.1.3, or S5.1.6, its service

brakes must be capable of stopping the vehicle from the multiple of 5 mph that is 4 to 8 mph less than the speed attainable in 2 miles, within distances that do not exceed the corresponding distances specified in Table II. If a vehicle is incapable of attaining a speed specified in S5.1.4 in the time or distance interval set forth, it must be tested at the highest speed attainable in the time or distance interval specified.

S5.1.1 *Stopping distance.* (a) The service brakes shall be capable of stopping each vehicle with a GVWR of less than 8,000 pounds, and each school bus with a GVWR between 8,000 pounds and 10,000 pounds in four effectiveness tests within the distances and from the speeds specified in S5.1.1.1, S5.1.1.2, S5.1.1.3, and S5.1.1.4.

(b) The service brakes shall be capable of stopping each vehicle with a GVWR of between 8,000 pounds and 10,000 pounds, other than a school bus, in three effectiveness tests within the distances and from the speeds specified in S5.1.1.1, S5.1.1.2, and S5.1.1.4.

(c) The service brakes shall be capable of stopping each vehicle with a GVWR greater than 10,000 pounds in two effectiveness tests within the distances and from the speeds specified in S5.1.1.2 and S5.1.1.3. Each school bus with a GVWR greater than 10,000 pounds manufactured after January 12, 1996 and before March 1, 1999 and which is equipped with an antilock brake system may comply with paragraph S5.1.1.2 and S5.5.1 rather than the first effectiveness test, as specified in S5.1.1.1. Each school bus with a GVWR greater than 10,000 pounds manufactured on or after March 1, 1999 shall be capable of meeting the requirements of S5.1.1 through S5.1.5, under the conditions prescribed in S6, when tested according to the procedures and in the sequence set forth in S7.

S5.1.1.1 In the first (preburnished) effectiveness test, the vehicle shall be capable of stopping from 30 mph and 60 mph within the corresponding distances specified in column I of table II.

S5.1.1.2 In the second effectiveness test, each vehicle with a GVWR of 10,000 pounds or less and each school bus with a GVWR greater than 10,000 pounds shall be capable of stopping from 30 mph and 60 mph, and each vehicle with a GVWR greater than 10,000 pounds (other than a school bus) shall be capable of stopping from 60 mph, within the corresponding distances specified in Column II of Table II. If the speed attainable in 2 miles is not less than 84 mph, a passenger car or other vehicle with a GVWR of 10,000 pounds or less shall also be capable of stopping from 80 mph within the corresponding distances specified in Column II of Table II.

S5.1.1.3 In the third effectiveness test the vehicle shall be capable of stopping at lightly loaded vehicle weight from 60 mph within the corresponding distance specified in column III of table II.

S5.1.1.4 In the fourth effectiveness test, a vehicle with a GVWR of 10,000 pounds or less shall be capable of stopping from 30 and 60 mph within the corresponding distances specified in column I of table II. If the speed attainable in 2 miles is not less than 84 mph, a passenger car, or other vehicle with a GVWR of 10,000 lbs., or less, shall also be capable of stopping from 80 mph within the corresponding distance specified in column I of table II.

If the speed attainable in 2 miles is not less than 99 mph, a passenger car shall, in addition, be capable of stopping from the applicable speed indicated below, within the corresponding distance specified in column I of table II.

Speed attainable in 2 miles (mph)	Required to stop from (mph)
Not less than 99 but less than 104	95
104 or more	100

For an EV, the speed attainable in 2 miles is determined with the propulsion batteries at a state of charge of not less than 95 percent at the beginning of the run.

S5.1.2 *Partial failure.*

S5.1.2.1 In vehicles manufactured with a split service brake system, in the event of a rupture or leakage type of failure in a single subsystem, other than a structural failure of a housing that is common to two or more subsystems, the remaining portion(s) of the service brake system shall continue to operate and shall be capable of stopping a vehicle from 60 mph within

the corresponding distance specified in column IV of table II.

S5.1.2.2 In vehicles not manufactured with a split service brake system, in the event of any one rupture or leakage type of failure in any component of the service brake system the vehicle shall, by operation of the service brake control, be capable of stopping 10 times consecutively from 60 mph within the corresponding distance specified in column IV of table II.

S5.1.2.3 For a vehicle manufactured with a service brake system in which the brake signal is transmitted electrically between the brake pedal and some or all of the foundation brakes, regardless of the means of actuation of the foundation brakes, the vehicle shall be capable of stopping from 60 mph within the corresponding distance specified in Column IV of Table II with any single failure in any circuit that electrically transmits the brake signal, and with all other systems intact.

S5.1.2.4 For an EV manufactured with a service brake system that incorporates RBS, the vehicle shall be capable of stopping from 60 mph within the corresponding distance specified in Column IV of Table II with any single failure in the RBS, and with all other systems intact.

S5.1.3 *Inoperative brake power assist unit or brake power unit.* A vehicle equipped with one or more brake power assist units shall meet the requirements of either S5.1.3.1, S5.1.3.2, or S5.1.3.4 (chosen at the option of the manufacturer), and a vehicle equipped with one or more brake power units shall meet the requirements of either S5.1.3.1, S5.1.3.3, or S5.1.3.4 (chosen at the option of the manufacturer).

S5.1.3.1 The service brakes on a vehicle equipped with one or more brake power assist units or brake power units, with one such unit inoperative and depleted of all reserve capability, shall be capable of stopping a vehicle from 60 mph within the corresponding distance specified in column IV of table II.

S5.1.3.2 *Brake power assist units.* The service brakes on a vehicle equipped with one or more brake power assist units, with one such unit inoperative, shall be capable of stopping a vehicle from 60 mph:

(a) In six consecutive stops at an average deceleration for each stop that is not lower than that specified in column I of table III, when the inoperative unit is not initially depleted of all reserve capability; and

(b) In a final stop, at an average deceleration that is not lower than 7 FPSPS for passenger cars (equivalent stopping distance 554 feet) or 6 FPSPS for vehicles other than passenger cars (equivalent stopping distance 646 feet), as applicable, when the inoperative unit is depleted of all reserve capacity.

S5.1.3.3 *Brake power units.* The service brakes of a vehicle equipped with one or more brake power units with an accumulator-type reserve system, with any one failure in any one unit shall be capable of stopping the vehicle from 60 mph—

(a) In 10 consecutive stops at an average deceleration for each stop that is not lower than that specified in column II of table III, when the unit is not initially depleted of all reserve capability; and

(b) In a final stop, at an average deceleration that is not lower than 7 FPSPS for passenger cars (equivalent stopping distance 554 feet) or 6 FPSPS for vehicles other than passenger cars (equivalent stopping distance 646 feet), as applicable, when the inoperative unit is depleted of all reserve capacity.

S5.1.3.4 *Brake power assist and brake power units.* The service brakes of a vehicle equipped with one or more brake power assist units or brake power units with a backup system, with one brake power assist unit or brake power unit inoperative and depleted of all reserve capability and with only the backup system operating in the failed subsystem, shall be capable of stopping the vehicle from 60 mph in 15 consecutive stops at an average deceleration for each stop that is not lower than 12 fpsps (equivalent stopping distance 323 feet).

S5.1.3.5 *Electric brakes.* Each vehicle with electrically-actuated service brakes (brake power unit) shall comply with the requirements of S5.1.3.1 with any single electrical failure in the electrically-actuated service brakes and all other systems intact.

S5.1.4 *Fade and recovery.* The service brakes shall be capable of stopping

each vehicle in two fade and recovery tests as specified below.

S5.1.4.1 The control force used for the baseline check stops or snubs shall be not less than 10 pounds, nor more than 60 pounds, except that the control force for a vehicle with a GVWR of 10,000 pounds or more may be between 10 pounds and 90 pounds.

S5.1.4.2 (a) Each vehicle with GVWR of 10,000 lbs or less shall be capable of making 5 fade stops (10 fade stops on the second test) from 60 mph at a deceleration not lower than 15 fpsps for each stop, followed by 5 fade stops at the maximum deceleration attainable from 5 to 15 fpsps.

(b) Each vehicle with a GVWR greater than 10,000 pounds shall be capable of making 10 fade snubs (20 fade snubs on the second test) from 40 mph to 20 mph at 10 fpsps for each snub.

S5.1.4.3 (a) Each vehicle with a GVWR of 10,000 pounds or less shall be capable of making five recovery stops from 30 mph at 10 fpsps for each stop, with a control force application that falls within the following maximum and minimum limits:

(1) A maximum for the first four recovery stops of 150 pounds, and for the fifth stop, of 20 pounds more than the average control force for the baseline check; and

(2) A minimum of—

(A) The average control force for the baseline check minus 10 pounds, or

(B) The average control force for the baseline check times 0.60,

whichever is lower (but in no case lower than 5 pounds).

(b) Each vehicle with a GVWR of more than 10,000 pounds shall be capable of making five recovery snubs from 40 mph to 20 mph at 10 fpsps for each snub, with a control force application that falls within the following maximum and minimum limits:

(1) A maximum for the first four recovery snubs of 150 pounds, and for the fifth snub, of 20 pounds more than the average control force for the baseline check (but in no case more than 100 pounds); and

(2) A minimum of—

(A) The average control force for the baseline check minus 10 pounds, or

(B) The average control force for the baseline check times 0.60,

whichever is lower (but in no case lower than 5 pounds).

S5.1.5 *Water recovery*. The service brakes shall be capable of stopping each vehicle in a water recovery test, as specified below.

S5.1.5.1 The control force used for the baseline check stops or snubs shall be not less than 10 pounds, nor more than 60 pounds, except that the control force for a vehicle with a GVWR of 10,000 pounds or more may be between 10 and 90 pounds.

S5.1.5.2(a) After being driven for 2 minutes at a speed of 5 mph in any combination of forward and reverse directions through a trough having a water dept of 6 inches, each vehicle with a GVWR of 10,000 pounds or less shall be capable of making five recovery stops from 30 mph at ten fpsps for each stop with a control force application that falls within the following maximum and minimum limits:

(1) A maximum for the first four recovery stops of 150 pounds, and for the fifth stop, of 45 pounds more than the average control force for the baseline check (but in no case more than 90 pounds, except that the maximum control force for the fifth stop in the case of a vehicle manufactured before September 1, 1976, shall be not more than plus 60 pounds of the average control force for the baseline check (but in no case more than 110 pounds).

(2) A minimum of—

(A) The average control force for the baseline check minus 10 pounds, or

(B) The average control force for the baseline check times 0.60,

whichever is lower (but in no case lower than 5 pounds).

(b) After being driven for 2 minutes at a speed of 5 mph in any combination of forward and reverse directions through a trough having a water depth of 6 inches, each vehicle with a GVWR of more than 10,000 pounds shall be capable of making five recovery stops from 30 mph at 10 fpsps for each stop with a control force application that falls within the following maximum and minimum limits:

(1) A maximum for the first four recovery stops of 150 pounds, and for the fifth stop, of 60 pounds more than the average control force for the baseline

check (but in no case more than 110 pounds); and

(2) A minimum of—

(A) The average control force for the baseline check minus 10 pounds, or

(B) The average control force for the baseline check times 0.60,

whichever is lower (but in no case lower than 5 pounds).

S5.1.6 *Spike stops.* Each vehicle with a GVWR of 10,000 lbs. or less shall be capable of making 10 spike stops from 30 mph, followed by 6 effectiveness (check) stops from 60 mph, at least one of which shall be within a corresponding stopping distance specified in column I of table II.

S5.1.7 Stability and control during braking. When stopped four consecutive times under the conditions specified in S6, each vehicle with a GVWR greater than 10,000 pounds manufactured on or after July 1, 2005 and each vehicle with a GVWR greater than 10,000 pounds manufactured in two or more stages on or after July 1, 2006 shall stop from 30 mph or 75 percent of the maximum drive-through speed, whichever is less, at least three times within the 12-foot lane, without any part of the vehicle leaving the roadway. Stop the vehicle with the vehicle at its lightly loaded vehicle weight, or at the manufacturer's option, at its lightly loaded vehicle weight plus not more than an additional 1000 pounds for a roll bar structure on the vehicle.

S5.2 *Parking Brake System.* Each vehicle shall be manufactured with a parking brake system of a friction type with a solely mechanical means to retain engagement, which shall under the conditions of S6, when tested according to the procedures specified in S7, meet the requirements specified in S5.2.1, S5.2.2, or S5.2.3 as appropriate, with the system engaged—

(a) In the case of a vehicle with a GVWR of 4,536 kilograms (10,000 pounds) or less, with a force applied to the control not to exceed 125 pounds for a foot-operated system and 90 pounds for a hand-operated system; and

(b) In the case of a vehicle with a GVWR greater than 4,536 kilograms (10,000 pounds), with a force applied to the control not to exceed 150 pounds for a foot-operated system and 125 pounds for a hand-operated system.

S5.2.1. Except as provided in § 5.2.2, the parking brake system on a passenger car and on a school bus with a GVWR of 10,000 pounds or less shall be capable of holding the vehicle stationary (to the limit of traction on the braked wheels) for 5 minutes in both a forward and reverse direction on a 30 percent grade.

S5.2.2 A vehicle of a type described in S5.2.1 at the option of the manufacturer may meet the requirements of S5.2.2.1, S5.2.2.2, and S5.2.2.3 instead of the requirements of S5.2.1 if:

(a) The vehicle has a transmission or transmission control which incorporates a parking mechanism, and

(b) The parking mechanism must be engaged before the ignition key can be removed.

S5.2.2.1 The vehicle's parking brake and parking mechanism, when both are engaged, shall be capable of holding the vehicle stationary (to the limit of traction of the braked wheels) for 5 minutes, in both forward and reverse directions, on a 30 percent grade.

S5.2.2.2 The vehicle's parking brake, with the parking mechanism not engaged, shall be capable of holding the vehicle stationary for 5 minutes, in both forward and reverse directions, on a 20 percent grade.

S5.2.2.3 With the parking mechanism engaged and the parking brake not engaged, the parking mechanism shall not disengage or fracture in a manner permitting vehicle movement, when the vehicle is impacted at each end, on a level surface, by a barrier moving at 2½ mph.

S5.2.3 (a) The parking brake system on a multipurpose passenger vehicle, truck or bus (other than a school bus) with a GVWR of 4,536 kilograms (10,000 pounds) or less shall be capable of holding the vehicle stationary for 5 minutes, in both forward and reverse directions, on a 20 percent grade.

(b) The parking brake system on a multipurpose passenger vehicle, truck, or bus (including a school bus) with a GVWR greater than 4,536 kilograms (10,000 pounds) shall be capable of holding the vehicle stationary for 5 minutes, in both forward and reverse directions, on a 20 percent grade.

S5.3 *Brake system indicator lamp.* Each vehicle shall have a brake system

indicator lamp or lamps, mounted in front of and in clear view of the driver, which meet the requirements of S5.3.1 through S5.3.5. A vehicle with a GVWR of 10,000 pounds or less may have a single common indicator lamp. A vehicle with a GVWR of greater than 10,000 pounds may have an indicator lamp which is common for gross loss of pressure, drop in the level of brake fluid, or application of the parking brake, but shall have a separate indicator lamp for antilock brake system malfunction. However, the options provided in S5.3.1(a) shall not apply to a vehicle manufactured without a split service brake system; such a vehicle shall, to meet the requirements of S5.3.1(a), be equipped with a malfunction indicator that activates under the conditions specified in S5.3.1(a)(4). This warning indicator shall, instead of meeting the requirements of S5.3.2 through S5.3.5, activate (while the vehicle remains capable of meeting the requirements of S5.1.2.2 and the ignition switch is in the ''on'' position) a continuous or intermittent audible signal and a flashing warning light, displaying the words ''STOP-BRAKE FAILURE'' in block capital letters not less than one-quarter of an inch in height.

S5.3.1 An indicator lamp shall be activated when the ignition (start) switch is in the ''on'' (''run'') position and whenever any of the conditions (a) or (b), (c), (d), (e), (f), and (g) occur:

(a) A gross loss of pressure (such as caused by rupture of a brake line but not by a structural failure of a housing that is common to two or more subsystems) due to one of the following conditions (chosen at the option of the manufacturer):

(1) Before or upon application of a differential pressure of not more than 225 lb/in^2 between the active and failed brake system measured at a master cylinder outlet or a slave cylinder outlet.

(2) Before or upon application of 50 pounds of control force upon a fully manual service brake.

(3) Before or upon application of 25 pounds of control force upon a service brake with a brake power assist unit.

(4) When the supply pressure in a brake power unit drops to a level not less than one-half of the normal system pressure.

(b) A drop in the level of brake fluid in any master cylinder reservoir compartment to less than the recommended safe level specified by the manufacturer or to one-fourth of the fluid capacity of that reservoir compartment, whichever is greater.

(c) A malfunction that affects the generation or transmission of response or control signals in an antilock brake system, or a total functional electrical failure in a variable proportioning brake system.

(d) Application of the parking brake.

(e) For a vehicle with electrically-actuated service brakes, failure of the source of electric power to the brakes, or diminution of state of charge of the batteries to less than a level specified by the manufacturer for the purpose of warning a driver of degraded brake performance.

(f) For a vehicle with electric transmission of the service brake control signal, failure of a brake control circuit.

(g) For an EV with RBS that is part of the service brake system, failure of the RBS.

S5.3.2 (a) Except as provided in paragraph (b) of this section, all indicator lamps shall be activated as a check of lamp function either when the ignition (start) switch is turned to the ''on'' (run) position when the engine is not running, or when the ignition (start) switch is in a position between ''on'' (run) and ''start'' that is designated by the manufacturer as a check position.

(b) The indicator lamps need not be activated when a starter interlock is in operation.

S5.3.3 (a) Each indicator lamp activated due to a condition specified in S5.3.1 shall remain activated as long as the malfunction exists, whenever the ignition (start) switch is in the ''on'' (run) position, whether or not the engine is running.

(b) For vehicles manufactured on and after September 1, 1999 with GVWRs greater than 10,000 lbs, each message about the existence of a malfunction, as described in S5.3.1(c), shall be stored in the antilock brake system after the ignition switch is turned to the ''off'' position and the indicator lamp shall

be automatically reactivated when the ignition switch is again turned to the ''on'' position. The indicator lamp shall also be activated as a check of lamp function whenever the ignition is turned to the ''on'' (run) position. The indicator lamp shall be deactivated at the end of the check of lamp function unless there is a malfunction or a message about a malfunction that existed when the key switch was last turned to the ''off'' position.

S5.3.4 When an indicator lamp is activated it may be steady burning or flashing.

S5.3.5 (a) Each indicator lamp shall display word, words or abbreviation, in accordance with the requirements of Standard No. 101 (49 CFR 571.101) and/or this section, which shall have letters not less than ⅛-inch high and be legible to the driver in daylight when lighted. Words in addition to those required by Standard No. 101 and/or this section and symbols may be provided for purposes of clarity.

(b) If a single common indicator is used, the lamp shall display the word ''Brake''. The letters and background of a single common indicator shall be of contrasting colors, one of which is red.

(c)(1) If separate indicators are used for one or more of the conditions described in S5.3.1(a) through S5.3.1(g) of this standard, the indicator display shall include the word ''Brake'' and appropriate additional labeling, except as provided in (c)(1) (A) through (D) of this paragraph.

(A) If a separate indicator lamp is provided for gross loss of pressure, the words ''Brake Pressure'' shall be used for S5.3.1(a).

(B) If a separate indicator lamp is provided for low brake fluid, the words ''Brake Fluid'' shall be used for S5.3.1(b), except for vehicles using hydraulic system mineral oil.

(C) If a separate indicator lamp is provided for an anti-lock system, the single word ''Antilock'' or ''Anti-lock'', or the abbreviation ''ABS'', may be used for S5.3.1(c).

(D) If a separate indicator lamp is provided for application of the parking brake, the single word ''Park'' may be used for S5.3.1(d).

(E) If a separate indicator is used for the regenerative brake system, the symbol ''RBS'' may be used. RBS failure may also be indicated by a lamp displaying the symbol ''ABS/RBS.''

(2) Except for a separate indicator lamp for an anti-lock system, a regenerative system, or an indicator for both anti-lock and regenerative system, the letters and background of each separate indicator lamp shall be of contrasting colors, one of which is red. The letters and background of a separate lamp for an anti-lock system, a regenerative system, or a lamp displaying both an anti-lock and a regenerative system shall be of contrasting colors, one of which is yellow.

S5.4 *Reservoirs.*

S5.4.1 *Master cylinder reservoirs.* A master cylinder shall have a reservoir compartment for each service brake subsystem serviced by the master cylinder. Loss of fluid from one compartment shall not result in a complete loss of brake fluid from another compartment.

S5.4.2 *Reservoir capacity.* Reservoirs, whether for master cylinders or other type systems, shall have a total minimum capacity equivalent to the fluid displacement resulting when all the wheel cylinders or caliper pistons serviced by the reservoirs move from a new lining, fully retracted position (as adjusted initially to the manufacturer's recommended setting) to a fully worn, fully applied position, as determined in accordance with S7.18(c) of this standard. Reservoirs shall have completely separate compartments for each subsystem except that in reservoir systems utilizing a portion of the reservoir for a common supply to two or more subsystems, individual partial compartments shall each have a minimum volume of fluid equal to at least the volume displaced by the master cylinder piston servicing the subsystem, during a full stroke of the piston. Each brake power unit reservoir servicing only the brake system shall have a minimum capacity equivalent to the fluid displacement required to charge the system piston(s) or accumulator(s) to normal operating pressure plus the displacement resulting when

all the wheel cylinders or caliper pistons serviced by the reservoir or accumulator(s) move from a new lining fully retracted position (as adjusted initially to the manufacturer's recommended setting) to a fully worn, fully applied position.

S5.4.3 *Reservoir labeling*—Each vehicle equipped with hydraulic brakes shall have a brake fluid warning statement that reads as follows, in letters at least one-eighth of an inch high: ''WARNING, Clean filler cap before removing. Use only _____ fluid from a sealed container.'' (Inserting the recommended type of brake fluid as specified in 49 CFR 571.116, e.g., ''DOT 3''). The lettering shall be—

(a) Permanently affixed, engraved, or embossed;

(b) Located so as to be visible by direct view, either on or within 4 inches of the brake fluid reservoir filler plug or cap; and

(c) Of a color that contrasts with its background, if it is not engraved or embossed.

S5.5 *Antilock and variable proportioning brake systems.*

S5.5.1 Each vehicle with a GVWR greater than 10,000 pounds, except for any vehicle with a speed attainable in 2 miles of not more than 33 mph, shall be equipped with an antilock brake system that directly controls the wheels of at least one front axle and the wheels of at least one rear axle of the vehicle. On each vehicle with a GVWR greater than 10,000 pounds but not greater than 19,500 pounds and motor homes with a GVWR greater than 10,000 pounds but not greater than 22,500 pounds manufactured before March 1, 2001, the antilock brake system may also directly control the wheels of the rear drive axle by means of a single sensor in the driveline. Wheels on other axles of the vehicle may be indirectly controlled by the antilock brake system.

S5.5.2 In the event of any failure (structural or functional) in an antilock or variable proportioning brake system, the vehicle shall be capable of meeting the stopping distance requirements specified in S5.1.2 for service brake system partial failure. For an EV that is equipped with both ABS and RBS that is part of the service brake system, the ABS must control the RBS.

S5.6 *Brake system integrity.* Each vehicle shall be capable of completing all performance requirements of S5 without—

(a) Detachment or fracture of any component of the braking system, such as brake springs and brake shoe or disc pad facing, other than minor cracks that do not impair attachment of the friction facing. All mechanical components of the braking system shall be intact and functional. Friction facing tearout (complete detachment of lining) shall not exceed 10 percent of the lining on any single frictional element.

(b) Any visible brake fluid or lubricant on the friction surface of the brake, or leakage at the master cylinder or brake power unit reservoir cover, seal and filler openings.

S6 *Test conditions.* The performance requirements of S5 shall be met under the following conditions. Where a range of conditions is specified, the vehicle shall be capable of meeting the requirements at all points within the range. Compliance of vehicles manufactured in two or more stages may, at the option of the final-stage manufacturer, be demonstrated to comply with this standard by adherence to the instructions of the incomplete manufacturer provided with the vehicle in accordance with §568.4(a)(7)(ii) and §568.5 of title 49 of the Code of Federal Regulations.

S6.1 *Vehicle weight.*

S6.1.1 Other than tests specified at lightly loaded vehicle weight in S7.5(a), S7.7, S7.8, and S7.9, the vehicle is loaded to its GVWR such that the weight on each axle as measured at the tire-ground interface is in proportion to its GAWR, except that each fuel tank is filled to any level from 100 percent of capacity (corresponding to full GVWR) to 75 percent. However, if the weight on any axle of a vehicle at lightly loaded vehicle weight exceeds the axle's proportional share of the gross vehicle weight rating, the load required to reach GVWR is placed so that the weight on that axle remains the same as a lightly loaded vehicle weight.

S6.1.2 For applicable tests specified in S7.5(a), S7.7, S7.8, and S7.9, vehicle weight is lightly loaded vehicle weight,

with the added weight, except for the roll bar structure allowed for trucks and buses with a GVWR greater than 10,000 pounds, distributed in the front passenger seat area in passenger cars, multipurpose passenger vehicles, and trucks, and in the area adjacent to the driver's seat in buses.

S6.2 *Electric vehicles and electric brakes.*

S6.2.1 The state of charge of the propulsion batteries is determined in accordance with SAE Recommended Practice J227a, *Electric Vehicle Test Procedure,* February 1976. The applicable sections of J227a are 3.2.1 through 3.2.4, 3.3.1 through 3.3.2.2, 3.4.1 and 3.4.2, 4.2.1, 5.2, 5.2.1, and 5.3.

S6.2.2 At the beginning of the first effectiveness test specified in S7.3, and at the beginning of each burnishing procedure, each EV's propulsion battery is at the maximum state of charge recommended by the manufacturer, as stated in the vehicle operator's manual or on a label that is permanently attached to the vehicle, or, if the manufacturer has made no recommendation, at a state of charge of not less than 95 percent. If a battery is replaced rather than recharged, the replacement battery is to be charged and measured for state of charge in accordance with these procedures. During each burnish procedure, each propulsion battery is restored to the recommended state of charge or a state of charge of not less than 95 percent after each increment of 40 burnish stops until each burnish procedure is complete. The batteries may be charged at a more frequent interval if, during a particular 40-stop increment, the EV is incapable of achieving the initial burnish test speed. During each burnish procedure, the propulsion batteries may be charged by an external means or replaced by batteries that are charged to the state of charge recommended by the manufacturer or a state of charge of not less than 95 percent. For EVs having a manual control for setting the level of regenerative braking, the manual control, at the beginning of each burnish procedure, is set to provide maximum regenerative braking throughout the burnish.

S6.2.3 At the beginning of each performance test in the test sequence (S7,3, S7.5, S7.7 through S7.11, and S7.13 through S7.19 of this standard), unless otherwise specified, each propulsion battery of an EV is at the maximum state of charge recommended by the manufacturer, as stated in the vehicle operator's manual or on a label that is permanently attached to the vehicle, or, if the manufacturer has made no recommendation, at a state of charge of not less than 95 percent. If batteries are replaced rather than recharged, each replacement battery shall be charged and measured for state of charge in accordance with these procedures. No further charging of any propulsion battery occurs during any of the performance tests in the test sequence of this standard. If the propulsion batteries are depleted during a test sequence such that the vehicle reaches automatic shut-down, will not accelerate, or the low state of charge warning lamp is illuminated, the vehicle is to be accelerated to brake test speed by auxiliary means.

S6.2.4 (a) For an EV equipped with RBS, the RBS is considered to be part of the service brake system if it is automatically controlled by an application of the service brake control, if there is no means provided for the driver to disconnect or otherwise deactivate it, and if it is activated in all transmission positions, including neutral. The RBS is operational during all burnishes and all tests, except for the test of a failed RBS.

(b) For an EV equipped with an RBS that is not part of the service brake system, the RBS is operational and set to produce the maximum regenerative braking effect during the burnishes, and is disabled during the test procedures. If the vehicle is equipped with a neutral gear that automatically disables the RBS, the test procedures which are designated to be conducted in gear may be conducted in neutral.

S6.2.5 For tests conducted ''in neutral,'' the operator of an EV with no ''neutral'' position (or other means such as a clutch for disconnecting the drive train from the propulsion motor(s)) does not apply any electromotive force to the propulsion motor(s). Any electromotive force that is applied to the propulsion motor(s) automatically remains in effect unless

otherwise specified by the test procedure.

S6.2.6 A vehicle equipped with electrically-actuated service brakes also performs the following test series. Conduct 10 stopping tests from a speed of 100 kph or the maximum vehicle speed, whichever is less. At least two of the 10 stopping distances must be less than or equal to 70 meters. The vehicle is loaded to GVWR for these tests and the transmission is in the neutral position when the service brake control is actuated and throughout the remainder of the test. The battery or batteries providing power to those electrically-actuated brakes, at the beginning of each test, shall be in a depleted state of charge for conditions (a), (b), or (c) of this paragraph as appropriate. An auxiliary means may be used to accelerate an EV to test speed.

(a) For an EV equipped with electrically-actuated service brakes deriving power from the propulsion batteries, and with automatic shut-down capability of the propulsion motor(s), the propulsion batteries are at not more than five percent above the EV actual automatic shut-down critical value. The critical value is determined by measuring the state-of-charge of each propulsion battery at the instant that automatic shut-down occurs and averaging the states-of-charge recorded.

(b) For an EV equipped with electrically-actuated service brakes deriving power from the propulsion batteries, and with no automatic shut-down capability of the propulsion motor(s), the propulsion batteries are at an average of not more than five percent above the actual state of charge at which the brake failure warning signal, required by S5.3.1(e) of this standard, is illuminated.

(c) For a vehicle which has an auxiliary battery (or batteries) that provides electrical energy to operate the electrically-actuated service brakes, the auxiliary battery(batteries) is (are) at (at an average of) not more than five percent above the actual state of charge at which the brake failure warning signal, required by S5.3.1(e) of this standard, is illuminated.

S6.3 *Tire inflation pressure.* Tire inflation pressure is the pressure recommended by the vehicle manufacturer for the GVWR of the vehicle.

S6.4 *Transmission selector control.* For S7.3, S7.5, S7.8, S7.15, S7.17, S7.11.1.2, S7.11.2.2, S7.11.3.2, and as required for S7.13, the transmission selector control is in neutral for all decelerations. For all other tests during all decelerations, the transmission selector is in the control position, other than overdrive, recommended by the manufacturer for driving on a level surface at the applicable test speed. To avoid engine stall during tests required to be run in gear a manual transmission may be shifted to neutral (or the clutch disengaged) when the vehicle speed decreases to 20 mph.

S6.5 *Engine.* Engine idle speed and ignition timing settings are according to the manufacturer's recommendations. If the vehicle is equipped with an adjustable engine speed governor, it is adjusted according to the manufacturer's recommendation.

S6.6 *Vehicle openings.* All vehicle openings (doors, windows, hood, trunk, convertible top, cargo doors, etc.) are closed except as required for instrumentation purposes.

S6.7 *Ambient temperature.* The ambient temperature is any temperature between 32 °F. and 100 °F.

S6.8 *Wind velocity.* The wind velocity is zero.

S6.9 *Road surface.*

S6.9.1 For vehicles with a GVWR of 10,000 pounds or less, road tests are conducted on a 12-foot-wide, level roadway, having a skid number of 81. Burnish stops are conducted on any surface. The parking brake test surface is clean, dry, smooth, Portland cement concrete.

S6.9.2(a) For vehicles with a GVWR greater than 10,000 pounds, road tests (excluding stability and control during braking tests) are conducted on a 12-foot-wide, level roadway, having a peak friction coefficient of 0.9 when measured using an American Society for Testing and Materials (ASTM) E 1136 standard reference test tire, in accordance with ASTM Method E 1337–90, at a speed of 40 mph, without water delivery. Burnish stops are conducted on any surface. The parking brake test surface is clean, dry, smooth, Portland cement concrete.

S6.9.2(b) For vehicles with a GVWR greater than 10,000 pounds, stability and control during braking tests are conducted on a 500-foot-radius curved roadway with a wet level surface having a peak friction coefficient of 0.5 when measured on a straight or curved section of the curved roadway using an American Society for Testing and Materials (ASTM) E1136 standard reference tire, in accordance with ASTM Method E1337–90, at a speed of 40 mph, with water delivery.

S6.10 *Vehicle position and wheel lockup restrictions.* The vehicle is aligned in the center of the roadway at the start of each brake application. Stops, other than spike stops, are made without any part of the vehicle leaving the roadway.

S6.10.1 For vehicles with a GVWR of 10,000 pounds or less, stops are made with wheel lockup permitted only as follows:

(a) At vehicle speeds above 10 mph, there may be controlled wheel lockup on an antilock-equipped axle, and lockup of not more than one wheel per vehicle, uncontrolled by an antilock system. (Dual wheels on one side of an axle are considered a single wheel.)

(b) At vehicle speeds of 10 mph or less, any wheel may lock up for any duration.

(c) Unlimited wheel lockup is allowed during spike stops (but not spike check stops), partial failure stops, and inoperative brake power or power assist unit stops.

S6.10.2 For vehicles with a GVWR greater than 10,000 pounds, stops are made with wheel lockup permitted only as follows:

(a) At vehicle speeds above 20 mph, any wheel on a nonsteerable axle other than the two rearmost nonliftable, nonsteerable axles may lock up for any duration. The wheels on the two rearmost nonliftable, nonsteerable axles may lock up according to (b).

(b) At vehicle speeds above 20 mph, one wheel on any axle or two wheels on any tandem may lock up for any duration.

(c) At vehicle speeds above 20 mph, any wheel not permitted to lock in (a) or (b) may lock up repeatedly, with each lockup occurring for a duration of one second or less.

(d) At vehicle speeds of 20 mph or less, any wheel may lock up for any duration.

(e) Unlimited wheel lockup is allowed during partial failure stops, and inoperative brake power or power assist stops.

S6.11 *Thermocouples.* The brake temperature is measured by plug-type thermocouples installed in the approximate center of the facing length and width of the most heavily loaded shoe or disc pad, one per brake, as shown in figure 1. A second thermocouple may be installed at the beginning of the test sequence if the lining wear is expected to reach a point causing the first thermocouple to contact the metal rubbing surface of a drum or rotor. For centergrooved shoes or pads, thermocouples are installed within one-eighth of an inch to one-quarter inch of the groove and as close to the center as possible.

S6.12 *Initial brake temperature.* Unless otherwise specified the brake temperature is 150 °F. to 200 °F.

S6.13 *Control forces.* Unless otherwise specified, the force applied to a brake control is not less than 15 lb and not more than 150 lb.

S6.14 Special drive conditions. A vehicle with a GVWR greater than 10,000 pounds equipped with an interlocking axle system or a front wheel drive system that is engaged and disengaged by the driver is tested with the system disengaged.

S6.15 Selection of compliance options. Where manufacturer options are specified, the manufacturer shall select the option by the time it certifies the vehicle and may not thereafter select a different option for the vehicle. Each manufacturer shall, upon request from the National Highway Traffic Safety Administration, provide information regarding which of the compliance options it has selected for a particular vehicle or make/model.

S7. Test procedure and sequence. Each vehicle shall be capable of meeting all the applicable requirements of S5 when tested according to the procedures and sequence set forth below, without replacing any brake system part or making any adjustments to the brake system other than as permitted

in the burnish and reburnish procedures and in S7.9 and S7.10. (For vehicles only having to meet the requirements of S5.1.1, S5.1.2, S5.1.3, and S5.1.7 in section S5.1, the applicable test procedures and sequence are S7.1, S7.2, S7.4, S7.5(b), S7.5(a), S7.8, S7.9, S7.10, and S7.18. However, at the option of the manufacturer, the following test procedure and sequence may be conducted: S7.1, S7.2, S7.3, S7.4, S7.5(b), S7.6, S7.7, S7.5(a), S7.8, S7.9, S7.10, and S7.18. The choice of this option must not be construed as adding to the requirements specified in S5.1.2 and S5.1.3.) Automatic adjusters must remain activated at all times. A vehicle shall be deemed to comply with the stopping distance requirements of S5.1 if at least one of the stops at each speed and load specified in each of S7.3, S7.5(b), S7.8, S7.9, S7.10, S7.15 and S7.17 (check stops) is made within a stopping distance that does not exceed the corresponding distance specified in Table II. When the transmission selector control is required to be in neutral for a deceleration, a stop or snub must be obtained by the following procedures:

(a) Exceed the test speed by 4 to 8 mph;

(b) Close the throttle and coast in gear to approximately 2 mph above the test speed;

(c) Shift to neutral; and

(d) When the test speed is reached, apply the service brakes.

S7.1 *Brake warming*. If the initial brake temperature for the first stop in a test procedure (other than S7.7 and S7.16) has not been reached, heat the brakes to the initial brake temperature by making not more than 10 snubs from not more than 40 to 10 mph, at a deceleration not greater than 10 fpsps.

S7.2 *Pretest instrumentation check*. Conduct a general check of instrumentation by making not more than 10 stops from a speed of not more than 30 mph, or 10 snubs from a speed of not more than 40 to 10 mph, at a deceleration of not more than 10 fpsps. If instrument repair, replacement, or adjustment is necessary, make not more than 10 additional stops or snubs after such repair, replacement, or adjustment.

S7.3 *Service brake system—first (preburnish) effectiveness test*. Make six stops from 30 mph. Then make six stops from 60 mph.

S7.4 *Service brake system—burnish procedure*.

S7.4.1 *Vehicles with GVWR of 10,000 lb or less*.

S7.4.1.1 *Burnish*. Burnish the brakes by making 200 stops from 40 mph at 12 fpsps (the 150 lb control force limit does not apply here). The interval from the start of one service brake application to the start of the next shall be either the time necessary to reduce the initial brake temperature to between 230 °F. and 270 °F., or the distance of 1 mile, whichever occurs first. Accelerate to 40 mph after each stop and maintain that speed until making the next stop.

S7.4.1.2 *Brake adjustment—post burnish*. After burnishing, adjust the brakes in accordance with the manufacturer's published recommendations.

S7.4.2 *Vehicles with GVWR greater than 10,000 pounds*.

S7.4.2.1 *Burnish*. Vehicles are burnished according to the following procedures. Make 500 snubs between 40 mph and 20 mph at a deceleration rate of 10 f.p.s.p.s. Except where an adjustment is specified, after each brake application accelerate to 40 mph and maintain that speed until making the next brake application at a point 1 mile from the initial point of the previous brake application. If the vehicle cannot attain a speed of 40 mph in 1 mph, continue to accelerate until the vehicle reaches 40 mph or until the vehicle has traveled 1.5 miles from the initial point of the previous brake application, whichever occurs first. The brakes shall be adjusted three times during the burnish procedure, in accordance with the manufacturer's recommendations, after 125, 250, and 375 snubs.

S7.4.2.2 *Brake adjustment—post burnish*. After burnishing, adjust the brakes in accordance with the manufacturer's published recommendations.

S7.5 (a) Stability and control during braking (vehicles with a GVWR greater than 10,000 pounds). Make four stops in the lightly-loaded weight condition specified in S5.1.7. Use a full brake application for the duration of the stop, with the clutch pedal depressed or the transmission selector control in the

neutral position, for the duration of each stop.

(b) Service brake system—second effectiveness test. For vehicles with a GVWR of 10,000 pounds or less, or any school bus, make six stops from 30 mph. Then, for any vehicle, make six stops from 60 mph. Then, for a vehicle with a GVWR of 10,000 pounds or less, make four stops from 80 mph if the speed attainable in 2 miles is not less than 84 mph.

S7.6 *First reburnish.* Repeat S7.4, except make 35 burnish stops or snubs. In the case of vehicles burnished in accordance with S7.4.2.1(a) of this section, reburnish the vehicle by making 35 snubs from 60 to 20 mph, but if the hottest brake temperature reaches 500 °F ±50 °F, make the remainder of the brake applications from the highest snub condition listed in Table IV that will maintain the hottest brake temperature at 500 °F ±50 °F. If at a snub condition of 40 to 20 mph, the temperature of the hottest brake exceeds 550 °F, make the remainder of the 35 brake applications from the snub condition without regard to brake temperature.

S7.7 *Parking brake test.* The parking brake tests for any vehicle on different grades, in different directions, and for different loads may be conducted in any order. The force required for actuation of a hand-operated brake system shall be measured at the center of the hand grip area or at a distance of 1½ inches from the end of the actuation lever, as illustrated in Figure II.

S7.7.1 *Test procedure for requirements of S5.2.1 and S5.2.3.*

S7.7.1.1 Condition the parking brake friction elements so that the temperature at the beginning of the test is at any level not more than 150 °F. (when the temperature of components on both ends of an axle are averaged).

S7.7.1.2 Drive the vehicle, loaded to GVWR, onto the specified grade with the longitudinal axis of the vehicle in the direction of the slope of the grade, stop the vehicle and hold it stationary by application of the service brake control, and place the transmission in neutral.

S7.7.1.3 With the vehicle held stationary by means of the service brake control, apply the parking brake by a single application of the force specified in (a), (b), or (c) of this paragraph, except that a series of applications to achieve the specified force may be made in the case of a parking brake system design that does not allow the application of the specified force in a single application:

(a) In the case of a passenger car or other vehicle with a GVWR of 10,000 lbs. or less, not more than 125 pounds for a foot-operated system, and not more than 90 pounds for a hand-operated system; and

(b) In the case of a vehicle with a GVWR greater than 4,536 kilograms (10,000 pounds) not more than 150 pounds for a foot-operated system, and not more than 125 pounds for a hand-operated system.

(c) For a vehicle using an electrically-activated parking brake, apply the parking brake by activating the parking brake control.

S7.7.1.4 Following the application of the parking brake in accordance with S7.7.1.3, release all force on the service brake control and commence the measurement of time if the vehicle remains stationary. If the vehicle does not remain stationary, reapplication of the service brake to hold the vehicle stationary, with reapplication of a force to the parking brake control at the level specified in S7.7.1.3 (a) or (b) as appropriate for the vehicle being tested (without release of the ratcheting or other holding mechanism of the parking brake) may be used twice to attain a stationary position.

S7.7.1.5 Following observation of the vehicle in a stationary condition for the specified time in one direction, repeat the same test procedure with the vehicle orientation in the opposite direction on the specified grade.

S7.7.1.6 Check the operation of the parking brake application indicator required by S5.3.1(d).

S7.7.2 *Test procedure for requirements of S5.2.2* (a) Check that transmission must be placed in park position to release key;

(b) Test as in S7.7.1, except in addition place the transmission control to engage the parking mechanism; and

(c) Test as in S7.7.1 except on a 20 percent grade, with the parking mechanism not engaged.

S7.7.3 *Lightly loaded vehicle.* Repeat S7.7.1 or S7.7.2 as applicable except with the vehicle at lightly loaded vehicles weight or at manufacturer's option, for a vehicle with GVWR greater than 10,000 pounds, at lightly loaded vehicle weight plus not more than an additional 1,000 pounds for a roll bar structure on the vehicle.

S7.7.4 *Non-service brake type parking brake systems.* For vehicles with parking brake systems not utilizing the service brake friction elements, burnish the friction elements of such systems prior to parking brake tests according to the manufacturer's published recommendations as furnished to the purchaser. If no recommendations are furnished, run the vehicle in an unburnished condition.

S7.8 *Service brake system test—lightly loaded vehicle (third effectiveness) test.* Make six stops from 60 mph with vehicle at lightly vehicle weight, or at the manufacturer's option for a vehicle with GVWR greater than 10,000 pounds, at lightly loaded vehicle weight plus not more than an additional 1,000 pounds for a roll bar structure on the vehicle. (This test is not applicable to a vehicle which has a GVWR of not less than 7,716 pounds and not greater than 10,000 pounds and is not a school bus.)

S7.9 *Service brake system test—partial failure.*

S7.9.1 With the vehicle at lightly loaded vehicle weight or at the manufacturer's option for a vehicle with a GVWR greater than 10,000 pounds, at lightly loaded vehicle weight plus not more than an additional 1,000 pounds for a roll bar structure on the vehicle, alter the service brake system to produce any one rupture or leakage type of failure, other than a structural failure of a housing that is common to two or more subsystems. Determine the control force, pressure level, or fluid level (as appropriate for the indicator being tested) necessary to activate the brake system indicator lamp. Make four stops if the vehicle is equipped with a split service brake system, or 10 stops if the vehicle is not so equipped, each from 60 mph, by a continuous application of the service brake control. Restore the service brake system to normal at completion of this test.

S7.9.2 Repeat S7.9.1 for each of the other subsystems.

S7.9.3 Repeat S7.9.1 and S7.9.2 with vehicle at GVWR. Restore the service brake system to normal at completion of this test.

S7.9.4 (For vehicles with antilock and/or variable proportioning brake systems.) With vehicle at GVWR, disconnect functional power source, or otherwise render antilock system inoperative. Disconnect variable proportioning brake system. Make four stops, each from 60 mph. If more than one antilock or variable proportioning brake subsystem is provided, disconnect or render one subsystem inoperative and run as above. Restore system to normal at completion of this test. Repeat for each subsystem provided.

Determine whether the brake system indicator lamp is activated when the electrical power source to the antilock or variable proportioning unit is disconnected.

S7.9.5 For a vehicle in which the brake signal is transmitted electrically between the brake pedal and some or all of the foundation brakes, regardless of the means of actuation of the foundation brakes, the tests in S7.9.1 through S7.9.3 of this standard are conducted by inducing any single failure in any circuit that electrically transmits the brake signal, and all other systems intact. Determine whether the brake system indicator lamp is activated when the failure is induced.

S7.9.6 For an EV with RBS that is part of the service brake system, the tests specified in S7.9.1 through S7.9.3 are conducted with the RBS disconnected and all other systems intact. Determine whether the brake system indicator lamp is activated when the RBS is disconnected.

S7.10 *Service brake system—inoperative brake power unit or brake power assist unit test.* (For vehicles equipped with brake power unit or brake power assist unit.)

S7.10.1 *Regular procedure.* (This test need not be run if the option in S7.10.2 is selected.) On vehicles with brake power assist units, render the brake power assist unit inoperative, or one of the brake power assist unit subsystems

if two or more subsystems are provided, by disconnecting the relevant power supply. Exhaust any residual brake power reserve capability of the disconnected system. On vehicles with brake power units, disconnect the primary source of power. Make four stops, each from 60 mph by a continuous application of the service brake control. Restore the system to normal at completion of this test. For vehicles equipped with more than one brake power unit or brake power assist unit, conduct tests of each in turn.

S7.10.2 *Optional Procedures.* On vehicles with brake power assist units, the unit is charged to maximum prior to start of test. (Engine may be run up in speed, then throttle closed quickly to attain maximum charge on vacuum assist units.) Brake power units shall also be charged to maximum accumulator pressure prior to start of test. No recharging is allowed after start of test.

(a) (For vehicles with brake power assist units.) Disconnect the primary source of power. Make six stops each from 60 mph, to achieve the average deceleration for each stop as specified in table III. Apply the brake control as quickly as possible. Maintain control force until vehicle has stopped.

At the completion of the stops specified above, deplete the system of any residual brake power reserve capability. Make one stop from 60 mph at an average deceleration of not lower than 7 fpsps for passenger cars (equivalent stopping distance 554 feet), or 6 fpsps for vehicles other than passenger cars (equivalent stopping distance 646 feet) and determine whether the control force exceeds 150 pounds.

(b) (For vehicles with brake power units with accumulator type systems.) Test as in S7.10.2(a), except make 10 stops instead of 6 and, at the completion of the 10 stops, deplete the failed element of the brake power unit of any residual brake power reserve capability before making the final stop.

(c) (For vehicles with brake power assist or brake power units with backup systems.) If the brake power or brake power assist unit operates in conjunction with a backup system and the backup system is activated automatically in the event of a primary power failure, the backup system is operative during this test. Disconnect the primary source of power of one subsystem. Make 15 stops, each from 60 mph, with the backup system activated for the failed subsystem, to achieve an average deceleration of 12 fpsps for each stop.

(d) Restore systems to normal at completion of these tests. For vehicles equipped with more than one brakepower assist or brakepower unit, conduct tests of each in turn.

S7.10.3 *Electric brakes.*

(a) For vehicles with electrically-actuated service brakes, the tests in S7.10.1 or S7.10.2 are conducted with any single electrical failure in the electric brake system instead of the brake power or brake power assist systems, and all other systems intact.

(b) For EVs with RBS that is part of the service brake system, the tests in S7.10.1 or S7.10.2 are conducted with the RBS discontinued and all other systems intact.

S7.11 *Service brake system—first fade and recovery test.*

S7.11.1 *Baseline check stops or snubs.*

S7.11.1.1 *Vehicles with GVWR of 10,000 lb or less.* Make three stops from 30 mph at 10 fpsps for each stop. Control force readings may be terminated when vehicle speed falls to 5 mph. Average the maximum brake control force required for the three stops.

S7.11.1.2 *Vehicles with GVWR greater than 10,000 pounds.* With transmission in neutral (or declutched), make three snubs from 40 to 20 mph at 10 fpsps for each snub. Average the maximum brake control force required for the three snubs.

S7.11.2 *Fade stops or snubs.*

S7.11.2.1 *Vehicles with GVWR of 10,000 pounds or less.* Make 5 stops from 60 mph at 15 fpsps followed by 5 stops at the maximum attainable deceleration between 5 and 15 fpsps for each stop. Establish an initial brake temperature before the first brake application of 130° to 150 °F. Initial brake temperatures before brake applications for subsequent stops are those occurring at the distance intervals. Attain the required deceleration within 1 second and, as a minimum, maintain it for the remainder of the stopping time. Control force readings may be terminated

when vehicle speed falls to 5 mph. Leave an interval of 0.4 mi between the start of brake applications. Accelerate immediately to the initial test speed after each stop. Drive 1 mi at 30 mph after the last fade stop, and immediately follow the recovery procedure specified in S7.11.3.1.

S7.11.2.2 *Vehicles with GVWR greater than 10,000 lb*. With transmission in neutral (or declutched) make 10 snubs from 40 to 20 mph at 10 fpsps for each snub. Establish an initial brake temperature before the first brake application of 130 °F. to 150 °F. Initial brake temperatures before brake application for subsequent snubs are those occurring in the time intervals specified below. Attain the required deceleration within 1 s and maintain it for the remainder of the snubbing time. Leave an interval of 30 s between snubs (start of brake application to start of brake application). Accelerate immediately to the initial test speed after each snub. Drive for 1.5 mi at 40 mph after the last snub and immediately follow the recovery procedure specified in S7.11.3.2.

S7.11.3 *Recovery stops or snubs*.

S7.11.3.1 *Vehicles with GVWR of 10,000 lb or less*. Make five stops from 30 mph at 10 fpsps for each stop. Control force readings may be terminated when vehicle speed falls to 5 mph. Allow a braking distance interval of 1 mi. Immediately after each stop accelerate at maximum rate to 30 mph and maintain that speed until making the next stop. Record the maximum control force for each stop.

S7.11.3.2 *Vehicles with GVWR greater than 10,000 lb*. With transmission in neutral (or declutched) make five snubs from 40 to 20 mph at 10 fpsps for each snub. After each snub, accelerate at maximum rate to 40 mph and maintain that speed until making the next brake application at a point 1.5 mi from the point of the previous brake application. Record the maximum control force for each snub.

S7.12 *Service brake system—second reburnish*. Repeat S7.6.

S7.13 *Service brake system—second fade and recovery test*. Repeat S7.11 except in S7.11.2 run 15 fade stops or 20 snubs instead of 10.

S7.14 *Third reburnish*. Repeat S7.6.

S7.15 *Service brake system—fourth effectiveness test*. Repeat S7.5. Then (for passenger cars) make four stops from either 95 mph if the speed attainable in 2 mi is 99 to (but not including) 104 mph, or 100 mph if the speed attainable in 2 mi is 104 mph or greater.

S7.16 *Service brake system—water recovery test*.

S7.16.1 *Baseline check stop*. Make three stops from 30 mph at 10 fpsps for each stop. Control force readings may be terminated when vehicle speed falls to 5 mph. Average the maximum brake control force required for the three stops.

S7.16.2 *Wet brake recovery stops*. With the brakes fully released at all times, drive the vehicle for 2 min at a speed of 5 mph in any combination of forward and reverse directions, through a trough having a water depth of 6 in. After leaving the trough, immediately accelerate at a maximum rate to 30 mph without a brake application. Immediately upon reaching that speed make five stops, each from 30 mph at 10 fpsps for each stop. After each stop (except the last), accelerate the vehicle immediately at a maximum rate to a speed of 30 mph and begin the next stop.

S7.17 *Spike stops*. Make 10 successive spike stops from 30 mph with the transmission in neutral, with no reverse stops. Make spike stops by applying a control force of 200 lb while recording control force versus time. Maintain control force until vehicle has stopped. At completion of 10 spike stops, make six effectiveness stops from 60 mph.

S7.18 *Final inspection*. Inspect—

(a) The service brake system for detachment or fracture of any components, such as brake springs and brake shoes or disc pad facing.

(b) The friction surface of the brake, the master cylinder or brake power unit reservoir cover and seal and filler openings, for leakage of brake fluid or lubricant.

(c) The master cylinder or brake power unit reservoir for compliance with the volume and labeling requirements of S5.4.2 and S5.4.3. In determining the fully applied worn condition assume that the lining is worn to: (1) Rivet or bolt heads on riveted or bolted linings, or (2) within one thirty-

seconds of an inch of shoe or pad mounting surface on bonded linings, or (3) the limit recommended by the manufacturer, whichever is larger relative to the total possible shoe or pad movement. Drums or rotors are assumed to be at nominal design drum diameter or rotor thickness. Linings are assumed adjusted for normal operating clearance in the released position.

(d) The brake system indicator light(s), for compliance with operation in various key positions, lens color, labeling, and location, in accordance with S5.3.

S7.19 *Moving barrier test.* (Only for vehicles that have been tested according to S7.7.2.) Load the vehicle to GVWR, release parking brake, and place the transmission selector control to engage the parking mechanism. With a moving barrier as described in paragraph 4.3 of SAE recommended practice J972 ''Moving Barrier Collision Tests,'' Nov. 1966 (revised May 2000), impact the vehicle from the front at 2½ mph. This incorporation by reference was approved by the Director of the Federal Register in accordance with 5 U.S.C. 552(a) and 1 CFR part 51. Copies may be obtained from the Society of Automotive Engineers, Inc., 400 Commonwealth Drive, Warrendale, PA 15096–0001. Copies may be inspected at the National Highway Traffic Safety Administration, Technical Information Services, 400 Seventh Street, SW., Plaza Level, Room 403, Washington, DC 20590, or at the National Archives and Records Administration (NARA). For information on the availability of this material at NARA, call 202–741–6030, or go to: *http://www.archives.gov/federal_register/code_of_federal_regulations/ibr_locations.html.* Keep the longitudinal axis of the barrier parallel with the longitudinal axis of the vehicle. Repeat the test, impacting the vehicle from the rear.

NOTE: The vehicle used for this test need not be the same vehicle that has been used for the braking tests.

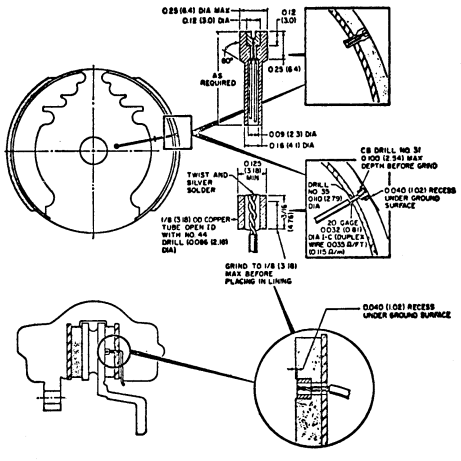

FIGURE 1—TYPICAL PLUG THERMOCOUPLE INSTALLATIONS

NOTE: The second thermocouple shall be installed at .080 inch depth within 1 inch circumferentially of the thermocouple installed at .040 inch depth.

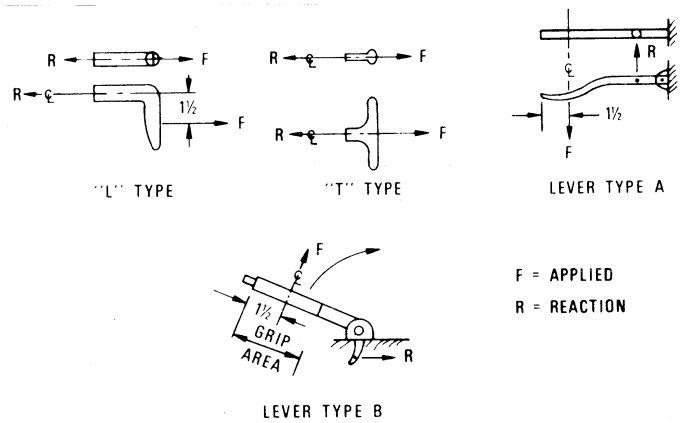

LOCATION FOR MEASURING BRAKE APPLICATION FORCE
(HAND BRAKE)

TABLE I—BRAKE TEST PROCEDURE SEQUENCE AND REQUIREMENTS

Sequence	Test load		Test procedure	Requirements
	Light	GVWR		
1. Instrumentation check			S7.2	
2. First (preburnish) effectiveness test		X	S7.3	S5.1.1.1
3. Burnish procedure		X	S7.4	
4. Second effectiveness test		X	S7.5(b)	S5.1.1.2
5. First reburnish		X	S7.6	
6. Parking brake	X	X	S7.7	S5.2
7. Stability and control during braking (braking-in-a-curve test).	X		S7.5(a)	S5.1.7
8. Third effectiveness (lightly loaded vehicle)	X		S7.8	S5.1.1.3
9. Partial failure	X	X	S7.9	S5.1.2
10. Inoperative brake power and power assist units		X	S7.10	S5.1.3
11. First fade and recovery		X	S7.11	S5.1.4
12. Second reburnish		X	S7.12	
13. Second fade and recovery		X	S7.13	S5.1.4
14. Third reburnish		X	S7.14	
15. Fourth effectiveness		X	S7.15	S5.1.1.4
16. Water recovery		X	S7.16	S5.1.5
17. Spike stops		X	S7.17	S5.1.6
18. Final inspection			S7.18	S5.6
19. Moving barrier test		X	S7.19	S5.2.2.3

TABLE II - STOPPING DISTANCES

Vehicle Test Speed (miles per hour)	Stopping Distance in feet for tests indicated															
	I-1st (preburnished) & 4th effectiveness; spike effectiveness check				II-2d effectiveness				III-3d (lightly loaded vehicles) effectiveness					IV-Inoperative brake power and power assist unit; partial failure		
	(a)	(b)	(c)	(d)	(a)	(b) & (c)	(d)	(e)	(a)	(b)	(c)	(d)	(e)	(a)	(b) & (c)	(d) & (e)
30	[1]57	[1,2]65	[1,2]69 (1st) [1,2]65 (4th and spike) [1]72	88	[1]54	[1]57	78	[1,2]70	51	57	65	84	70	114	130	170
35	74	83	91	132	70	74	106	96	67	74	83	114	96	155	176	225
40	96	108	119	173	91	96	138	124	87	96	108	149	124	202	229	288
45	121	137	150	218	115	121	175	158	110	121	137	189	158	257	291	358
50	150	169	185	264	142	150	216	195	135	150	169	233	195	317	359	435
55	181	204	224	326	172	181	261	236	163	181	204	281	236	383	433	530
60	[1]216	[1]242	[1]267	388	[1]204	[1]216	[1]310	[1]280	[1]194	[1]216	[1]242	[1]335	[1]280	[1]456	[1]517	[1]613
80	[1]405	[1]459	[1]510	NA	[1]383	NA	NA	NA	NA	NA	NA	NA	NA	NA	NA	NA
95	[1]607	NA	NA	NA	NA	NA	NA	NA	NA	NA	NA	NA	NA	NA	NA	NA
100	[1]673	NA	NA	NA	NA	NA	NA	NA	NA	NA	NA	NA	NA	NA	NA	NA

[1] Distance for specified tests. [2] Applicable to school buses only. NA = Not applicable
Note: (a) Passenger cars; (b) vehicles other than passenger cars with GVWR of less than 8,000 lbs; (c) Vehicles with GVWR of not less than 8,000 lbs and not more than 10,000 lbs; (d) vehicles, other than buses, with GVWR greater than 10,000 lbs; (e) buses, including school buses, with GVWR greater than 10,000 lbs.

TABLE III—INOPERATIVE BRAKE POWER ASSIST AND BRAKE POWER UNITS

Stop No.	Average deceleration, FPSPS				Equivalent stopping distance, feet			
	Column 1—brake power assist		Column 2—brake power unit		Column 3—brake power assist		Column 4—brake power unit	
	(a)	(b) and (c)	(a)	(b) and (c)	(a)	(b) and (c)	(a)	(b) and (c)
1	16.0	14.0	16.0	13.0	242	277	242	298
2	12.0	12.0	13.0	11.0	323	323	298	352
3	10.0	10.0	12.0	10.0	388	388	323	388
4	9.0	8.5	11.0	9.5	431	456	352	409
5	8.0	7.5	10.0	9.0	484	517	388	431
6	7.5	6.7	9.5	8.5	517	580	409	456
7	[1] 7.0	[1] 6.0	9.0	8.0	554	646	431	484
8	NA	NA	8.5	7.5	NA	NA	456	517
9	NA	NA	8.0	7.0	NA	NA	484	554
10	NA	NA	7.5	6.5	NA	NA	517	596
11	NA	NA	[1] 7.0	[1] 6.0	NA	NA	554	646

[1] Depleted. (a) Passenger cars; (b) vehicles other than passenger cars with GVWR of 10,000 lbs or less; (c) vehicles with GVWR greater than 10,000 lbs; NA=Not applicable.

[41 FR 29696, July 19, 1976; 41 FR 32221, Aug. 2, 1976, as amended at 41 FR 36026, 36027, Aug. 26, 1976; 43 FR 9606, Mar. 9, 1978; 46 FR 64, Jan. 2, 1981; 46 FR 21180, Apr. 9, 1981; 47 FR 61893, Dec. 21, 1981; 48 FR 39941, Sept. 2, 1983; 49 FR 30199, July 27, 1984; 52 FR 19874, May 28, 1987; 53 FR 8200, Mar. 14, 1988; 54 FR 22905, May 30, 1989; 54 FR 40082, Sept. 29, 1989; 57 FR 47800, Oct. 20, 1992; 58 FR 45461, Aug. 30, 1993; 60 FR 6434, Feb. 2, 1995; 60 FR 13256 and 13303, Mar. 10, 1995; 61 FR 19562, May 2, 1996; 62 FR 46917, Sept. 5, 1997; 62 FR 51069, Sept. 30, 1997; 64 FR 9449, Feb. 26, 1999; 64 FR 48564, Sept. 7, 1999; 65 FR 6331, Feb. 9, 2000; 68 FR 47495, Aug. 11, 2003; 67 FR 79439, Dec. 27, 2002; 69 FR 75488, Dec. 17, 2004; 70 FR 37713, June 30, 2005]

§ 571.106 Standard No. 106; Brake hoses.

S1. *Scope*. This standard specifies labeling and performance requirements for motor vehicle brake hose, brake hose assemblies, and brake hose end fittings.

S2. *Purpose*. The purpose of this standard is to reduce deaths and injuries occurring as a result of brake system failure from pressure or vacuum loss due to hose or hose assembly rupture.

S3. *Application*. This standard applies to passenger cars, multipurpose passenger vehicles, trucks, buses, trailers, and motorcycles, and to hydraulic, air, and vacuum brake hose, brake hose assemblies, and brake hose end fittings for use in those vehicles.

S4. *Definitions*.

TABLE II - STOPPING DISTANCES

Vehicle Test Speed (miles per hour)	Stopping Distance in feet for tests indicated															
	I-1st (preburnished) & 4th effectiveness; spike effectiveness check				II-2d effectiveness				III-3d (lightly loaded vehicles) effectiveness					IV-Inoperative brake power and power assist unit; partial failure		
	(a)	(b)	(c)	(d)	(a)	(b) & (c)	(d)	(e)	(a)	(b)	(c)	(d)	(e)	(a)	(b) & (c)	(d) & (e)
30	[1]57	[1,2]65	[1,2]69 (1st) [1,2]65 (4th and spike) [1]72	88	[1]54	[1]57	78	[1,2]70	51	57	65	84	70	114	130	170
35	74	83	91	132	70	74	106	96	67	74	83	114	96	155	176	225
40	96	108	119	173	91	96	138	124	87	96	108	149	124	202	229	288
45	121	137	150	218	115	121	175	158	110	121	137	189	158	257	291	358
50	150	169	185	264	142	150	216	195	135	150	169	233	195	317	359	435
55	181	204	224	326	172	181	261	236	163	181	204	281	236	383	433	530
60	[1]216	[1]242	[1]267	388	[1]204	[1]216	[1]310	[1]280	[1]194	[1]216	[1]242	[1]335	[1]280	[1]456	[1]517	[1]613
80	[1]405	[1]459	[1]510	NA	[1]383	NA	NA	NA	NA	NA	NA	NA	NA	NA	NA	NA
95	[1]607	NA	NA	NA	NA	NA	NA	NA	NA	NA	NA	NA	NA	NA	NA	NA
100	[1]673	NA	NA	NA	NA	NA	NA	NA	NA	NA	NA	NA	NA	NA	NA	NA

[1] Distance for specified tests. [2] Applicable to school buses only. NA = Not applicable
Note: (a) Passenger cars; (b) vehicles other than passenger cars with GVWR of less than 8,000 lbs; (c) Vehicles with GVWR of not less than 8,000 lbs and not more than 10,000 lbs; (d) vehicles, other than buses, with GVWR greater than 10,000 lbs; (e) buses, including school buses, with GVWR greater than 10,000 lbs.

TABLE III—INOPERATIVE BRAKE POWER ASSIST AND BRAKE POWER UNITS

Stop No.	Average deceleration, FPSPS				Equivalent stopping distance, feet			
	Column 1—brake power assist		Column 2—brake power unit		Column 3—brake power assist		Column 4—brake power unit	
	(a)	(b) and (c)	(a)	(b) and (c)	(a)	(b) and (c)	(a)	(b) and (c)
1	16.0	14.0	16.0	13.0	242	277	242	298
2	12.0	12.0	13.0	11.0	323	323	298	352
3	10.0	10.0	12.0	10.0	388	388	323	388
4	9.0	8.5	11.0	9.5	431	456	352	409
5	8.0	7.5	10.0	9.0	484	517	388	431
6	7.5	6.7	9.5	8.5	517	580	409	456
7	[1] 7.0	[1] 6.0	9.0	8.0	554	646	431	484
8	NA	NA	8.5	7.5	NA	NA	456	517
9	NA	NA	8.0	7.0	NA	NA	484	554
10	NA	NA	7.5	6.5	NA	NA	517	596
11	NA	NA	[1] 7.0	[1] 6.0	NA	NA	554	646

[1] Depleted. (a) Passenger cars; (b) vehicles other than passenger cars with GVWR of 10,000 lbs or less; (c) vehicles with GVWR greater than 10,000 lbs; NA=Not applicable.

[41 FR 29696, July 19, 1976; 41 FR 32221, Aug. 2, 1976, as amended at 41 FR 36026, 36027, Aug. 26, 1976; 43 FR 9606, Mar. 9, 1978; 46 FR 64, Jan. 2, 1981; 46 FR 21180, Apr. 9, 1981; 47 FR 61893, Dec. 21, 1981; 48 FR 39941, Sept. 2, 1983; 49 FR 30199, July 27, 1984; 52 FR 19874, May 28, 1987; 53 FR 8200, Mar. 14, 1988; 54 FR 22905, May 30, 1989; 54 FR 40082, Sept. 29, 1989; 57 FR 47800, Oct. 20, 1992; 58 FR 45461, Aug. 30, 1993; 60 FR 6434, Feb. 2, 1995; 60 FR 13256 and 13303, Mar. 10, 1995; 61 FR 19562, May 2, 1996; 62 FR 46917, Sept. 5, 1997; 62 FR 51069, Sept. 30, 1997; 64 FR 9449, Feb. 26, 1999; 64 FR 48564, Sept. 7, 1999; 65 FR 6331, Feb. 9, 2000; 68 FR 47495, Aug. 11, 2003; 67 FR 79439, Dec. 27, 2002; 69 FR 75488, Dec. 17, 2004; 70 FR 37713, June 30, 2005]

§ 571.106 Standard No. 106; Brake hoses.

S1. *Scope*. This standard specifies labeling and performance requirements for motor vehicle brake hose, brake hose assemblies, and brake hose end fittings.

S2. *Purpose*. The purpose of this standard is to reduce deaths and injuries occurring as a result of brake system failure from pressure or vacuum loss due to hose or hose assembly rupture.

S3. *Application*. This standard applies to passenger cars, multipurpose passenger vehicles, trucks, buses, trailers, and motorcycles, and to hydraulic, air, and vacuum brake hose, brake hose assemblies, and brake hose end fittings for use in those vehicles.

S4. *Definitions*.

Armor means protective material installed on a brake hose to increase the resistance of the hose or hose assembly to abrasion or impact damage.

Brake hose means a flexible conduit, other than a vacuum tubing connector, manufactured for use in a brake system to transmit or contain the fluid pressure or vacuum used to apply force to a vehicle's brakes. For hose, a dimensional description such as ''¼-inch hose'' refers to the nominal inside diameter. For tubing, a dimensional description such as ''¼-in tubing'' refers to the nominal outside diameter.

Brake hose assembly means a brake hose, with or without armor, equipped with end fittings for use in a brake system, but does not include an air or vacuum assembly prepared by the owner or operator of a used vehicle, by his employee, or by a repair facility, for installation in that used vehicle.

Brake hose end fitting means a coupler, other than a clamp, designed for attachment to the end of a brake hose.

Free length means the linear measurement of hose exposed between the end fittings of a hose assembly in a straight position.

Permanently attached end fitting means an end fitting that is attached by deformation of the fitting about the hose by crimping or swaging, or an end fitting that is attached by use of a sacrificial sleeve or ferrule that requires replacement each time a hose assembly is rebuilt.

Preformed means a brake hose that is manufactured with permanent bends and is shaped to fit a specific vehicle without further bending.

Rupture means any failure that results in separation of a brake hose from its end fitting or in leakage.

Vacuum tubing connector means a flexible conduit of vacuum that (i) connects metal tubing to metal tubing in a brake system, (ii) is attached without end fittings, and (iii) when installed, has an unsupported length less than the total length of those portions that cover the metal tubing.

S5. *Requirements—hydraulic brake hose, brake hose assemblies, and brake hose end fittings.*

S5.1 *Construction.* (a) Each hydraulic brake hose assembly shall have permanently attached brake hose end fittings which are attached by deformation of the fitting about the hose by crimping or swaging.

(b) Each hydraulic brake hose assembly that is equipped with a permanent supplemental support integrally attached to the assembly and is manufactured as a replacement for use on a vehicle not equipped, as an integral part of the vehicle's original design, with a means of attaching the support to the vehicle shall be equipped with a bracket that is integrally attached to the supplemental support and that adapts the vehicle to properly accept this type of brake hose assembly.

S5.2 *Labeling.*

S5.2.1 Each hydraulic brake hose, except hose sold as part of a motor vehicle, shall have at least two clearly identifiable stripes of at least one-sixteenth of an inch in width, placed on opposite sides of the brake hose parallel to its longitudinal axis. One stripe may be interrupted by the information required by S5.2.2, and the other stripe may be interrupted by additional information at the manufacturer's option. However, hydraulic brake hose manufactured for use only in an assembly whose end fittings prevent its installation in a twisted orientation in either side of the vehicle, need not meet the requirements of S5.2.1.

S5.2.2 Each hydraulic brake hose shall be labeled, or cut from bulk hose that is labeled, at intervals of not more than 6 inches, measured from the end of one legend to the beginning of the next, in block capital letters and numerals at least one-eighth of an inch high, with the information listed in paragraphs (a) through (e) of this section. The information need not be present on hose that is sold as part of a brake hose assembly or a motor vehicle.

(a) The symbol DOT, constituting a certification by the hose manufacturer that the hose conforms to all applicable motor vehicle safety standards.

(b) A designation that identifies the manufacturer of the hose, which shall be filed in writing with: Office of Vehicle Safety Compliance, Equipment Division NVS–222, National Highway Traffic Safety Administration, 400 Seventh St. SW., Washington, DC 20590.

The marking may consist of a designation other than block capital letters required by S5.2.2.

(c) The month, day, and year, or the month and year, of manufacture, expressed in numerals. For example, 10/1/96 means October 1, 1996.

(d) The nominal inside diameter of the hose expressed in inches or fractions of inches, or in millimeters followed by the abbreviation ''mm.''

(e) Either ''HR'' to indicate that the hose is regular expansion hydraulic hose or ''HL'' to indicate that the hose is low expansion hydraulic hose.

S5.2.3 *Package labeling for brake hose assemblies designed to be used with a supplemental support.* (a) Each hydraulic brake hose assembly that is equipped with a permanent supplemental support integrally attached to the assembly and is manufactured as a replacement assembly for a vehicle equipped, as an integral part of the vehicle's original design, with a means of attaching the support to the vehicle shall be sold in a package that is marked or labeled as follows: ''FOR USE ON [*insert Manufacturer, Model Name*] ONLY'';

(b) Each hydraulic brake hose assembly that is equipped with a permanent supplemental support integrally attached to the assembly and is manufactured as a replacement for use on a vehicle not equipped, as an integral part of the vehicle's original design, with a means of attaching the support to the vehicle shall comply with paragraphs (a) (1) and (2) of this section:

(1) Be sold in a package that is marked or labeled as follows: ''FOR USE ONLY WITH A SUPPLEMENTAL SUPPORT.''

(2) Be accompanied by clear, detailed instructions explaining the proper installation of the brake hose and the supplemental support bracket to the vehicle and the consequences of not attaching the supplemental support bracket to the vehicle. The instructions shall be printed on or included in the package specified in paragraph (a)(1) of this section.

S5.2.4 Each hydraulic brake hose assembly, except those sold as part of a motor vehicle, shall be labeled by means of a band around the brake hose assembly as specified in this paragraph or, at the option of the manufacturer, by means of labeling as specified in S5.2.4.1. The band may at the manufacturer's option be attached so as to move freely along the length of the assembly, as long as it is retained by the end fittings. The band shall be etched, embossed, or stamped in block capital letters, numerals or symbols at least one-eighth of an inch high, with the following information:

(a) The symbol DOT constituting certification by the hose assembler that the hose assembly conforms to all applicable motor vehicle safety standards.

(b) A designation that identifies the manufacturer of the hose assembly, which shall be filed in writing with: Office of Vehicle Safety Compliance, Equipment Division NVS–222, National Highway Traffic Safety Administration, 400 Seventh St. SW., Washington, DC 20590. The designation may consist of block capital letters, numerals or a symbol.

S5.2.4.1 At least one end fitting of a hydraulic brake hose assembly shall be etched, stamped or embossed with a designation at least one-sixteenth of an inch high that identifies the manufacturer of the hose assembly and is filed in accordance with S5.2.4(b).

S5.3 *Test requirements.* A hydraulic brake hose assembly or appropriate part thereof shall be capable of meeting any of the requirements set forth under this heading, when tested under the conditions of S13 and the applicable procedures of S6. However, a particular hose assembly or appropriate part thereof need not meet further requirements after having been subjected to and having met the constriction requirement (S5.3.1) and any one of the requirements specified in S5.3.2 through S5.3.13.

S5.3.1 *Constriction.* Except for that part of an end fitting which does not contain hose, every inside diameter of any section of a hydraulic brake hose assembly shall be not less than 64 percent of the nominal inside diameter of the brake hose (S6.12).

S5.3.2 *Expansion and burst strength.* The maximum expansion of a hydraulic brake hose assembly at 1,000 psi, 1,500 psi and 2,900 psi shall not exceed the

values specified in Table I (S6.1), except that a brake hose larger than 3/16 inch or 5 mm is not subject to the 2,900 psi expansion test requirements. The hydraulic brake hose assembly shall then withstand water pressure of 4,000 psi for 2 minutes without rupture, and then shall not rupture at less than 7,000 psi for a 1/8 inch, 3 mm, or smaller diameter hose, or at less than 5,000 psi for a hose with a diameter larger than 1/8 inch or 3 mm (S6.2).

TABLE I—MAXIMUM EXPANSION OF FREE LENGTH BRAKE HOSE, CC/FT

Hydraulic brake hose, inside diameter	Test pressure					
	1,000 psi		1,500 psi		2,900 psi	
	Regular expansion hose	Low expansion hose	Low expansion hose	Regular expansion hose	Regular expansion hose	Low expansion hose
1/8 inch, or 3mm, or less	0.66	0.33	0.79	0.42	1.21	0.61
> 1/8 inch or 3mm, to 3/16 inch or 5 mm	0.86	0.55	1.02	0.72	1.67	0.91
> 3/16 inch or 5 mm	1.04	0.82	1.30	1.17	*	*

S5.3.3 *Whip resistance.* A hydraulic brake hose assembly shall not rupture when run continuously on a flexing machine for 35 hours (S6.3).

S5.3.4 *Tensile strength.* A hydraulic brake hose assembly shall withstand a pull of 325 pounds without separation of the hose from its end fittings during a slow pull test, and shall withstand a pull of 370 pounds without separation of the hose from its end fittings during a fast pull test (S6.4).

S5.3.5 *Water absorption and burst strength.* A hydraulic brake hose assembly, after immersion in water for 70 hours (S6.5), shall withstand water pressure of 4,000 psi for 2 minutes, and then shall not rupture at less than 5,000 psi (S6.2).

S5.3.6 *Water absorption and tensile strength.* A hydraulic brake hose assembly, after immersion in water for 70 hours (S6.5), shall withstand a pull of 325 pounds without separation of the hose from its end fittings during a slow pull test, and shall withstand a pull of 370 pounds without separation of the hose from its end fittings during a fast pull test (S6.4).

S5.3.7 *Water absorption and whip resistance.* A hydraulic brake hose assembly, after immersion in water for 70 hours (S6.5), shall not rupture when run continuously on a flexing machine for 35 hours (S6.3).

S5.3.8 *Low-temperature resistance.* A hydraulic brake hose conditioned at a temperature between minus 49 degrees Fahrenheit (minus 45 degrees Celsius) and minus 54 degrees Fahrenheit (minus 48 degrees Celsius) for 70 hours shall not show cracks visible without magnification when bent around a cylinder as specified in S6.6 (S6.6).

S5.3.9 *Brake fluid compatibility, constriction, and burst strength.* Except for brake hose assemblies designed for use with mineral or petroleum-based brake fluids, a hydraulic brake hose assembly shall meet the constriction requirement of S5.3.1 after having been subjected to a temperature of 248 degrees Fahrenheit (120 degrees Celsius) for 70 hours while filled with SAE RM–66–04 ''Compatibility Fluid,'' as described in Appendix B of SAE Standard J1703, revised JAN 1995, ''Motor Vehicle Brake Fluid.'' This incorporation by reference was approved by the Director of the Federal Register in accordance with 5 U.S.C. 552(a) and 1 CFR Part 51. Copies may be obtained from the Society of Automotive Engineers, Inc., 400 Commonwealth Drive, Warrendale, PA 15096–0001. Copies may be inspected at the National Highway Traffic Safety Administration, Technical Information Services, 400 Seventh Street, SW., Plaza Level, Room 403, Washington, DC 20590, or at the National Archives and Records Administration (NARA). For information on the availability of this material at NARA, call 202–741–6030, or go to: *http://www.archives.gov/federal_register/code_of_federal_regulations/ibr_locations.html.* It shall then withstand water pressure of 4,000 psi for 2

minutes and thereafter shall not rupture at less than 5,000 psi (S6.2 except all sizes of hose are tested at 5,000 psi).

S5.3.10 *Ozone resistance.* A hydraulic brake hose shall not show cracks visible under 7-power magnification after exposure to ozone for 70 hours at 104°F. (S6.8).

S5.3.12 *High temperature impulse test.* A brake hose assembly tested under the conditions in S6.10:

(a) Shall withstand pressure cycling for 150 cycles, at 295 degrees Fahrenheit (146 degrees Celsius) without leakage;

(b) Shall not rupture during a 2-minute, 4,000 psi pressure hold test, and;

(c) Shall not burst at a pressure less than 5,000 psi.

S5.3.13 *End fitting corrosion resistance.* After 24 hours of exposure to salt spray, a hydraulic brake hose end fitting shall show no base metal corrosion on the end fitting surface except where crimping or the application of labeling information has caused displacement of the protective coating (S6.11).

S6. *Test procedures—Hydraulic brake hose, brake hose assemblies, and brake hose end fittings.*

S6.1. *Expansion test.*

S6.1.1 *Apparatus.* Utilize a test apparatus (as shown in Figure 1) which consists of:

(a) Source for required fluid pressure;

(b) Test fluid of water without any additives and free of gases;

(c) Reservoir for test fluid;

(d) Pressure gauges;

(e) Brake hose end fittings in which to mount the hose vertically; and

(f) Graduate burette with 0.05 cc increments.

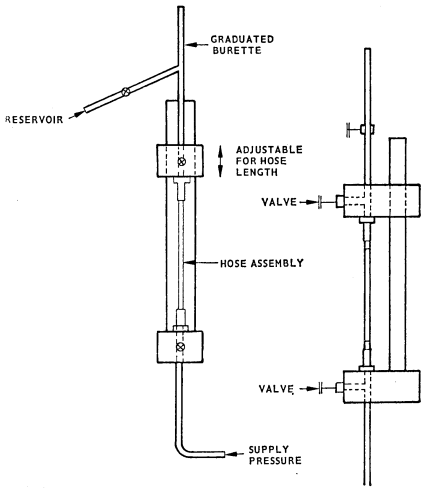

FIG. 1—EXPANSION TEST APPARATUS

S6.1.2 *Preparation.* (a) Measure the free length of the hose assembly.

(b) Mount the hose so that it is in a vertical straight position without tension when pressure is applied.

(c) Fill the hose with test fluid and bleed all gases from the system.

(d) Close the valve to the burette and apply 1,500 psi for 10 seconds; then release pressure.

S6.1.3 *Calculation of expansion at 1,000 and 1,500 psi.* (a) Adjust the fluid level in the burette to zero.

(b) Close the valve to the burette, apply pressure at the rate of 15,000 psi per minute, and seal 1,000 psi in the hose (1,500 psi in the second series, and 2,900 psi in the third series).

(c) After 3 seconds open the valve to the burette for 10 seconds and allow the fluid in the expanded hose to rise into the burette.

(d) Repeat the procedure in steps (b) and (c) twice. Measure the amount of test fluid which has accumulated in the burette as a result of the three applications of pressure.

(e) Calculate the volumetric expansion per foot by dividing the total accumulated test fluid by 3 and further dividing by the free length of the hose in feet.

S6.2 *Burst strength test.* (a) Connect the brake hose to a pressure system

and fill it completely with water, allowing all gases to escape.

(b) Apply water pressure of 4,000 psi at a rate of 15,000 psi per minute.

(c) After 2 minutes at 4,000 psi, increase the pressure at the rate of 15,000 psi per minute until the pressure exceeds 5,000 psi for a brake hose larger than ⅛ inch or 3 mm diameter, or until the pressure exceeds 7,000 psi for a brake hose of ⅛ inch, 3 mm, or smaller diameter.

S6.3 *Whip resistance test.*

S6.3.1 *Apparatus.* Utilize test apparatus that is dynamically balanced and includes:

(a) A movable header consisting of a horizontal bar equipped with capped end fittings and mounted through bearings at each end to points 4 inches from the center of two vertically rotating disks whose edges are in the same vertical plane;

(b) An adjustable stationary header parallel to the movable header in the same horizontal plane as the centers of the disks, and fitted with open end fittings;

(c) An elapsed time indicator; and

(d) A source of water pressure connected to the open end fittings.

S6.3.2 *Preparation.* (a) Except for the supplemental support specified in S6.3.2(d), remove all external appendages including, but not limited to, hose armor, chafing collars, mounting brackets, date band and spring guards.

(b) Measure the hose free length.

(c) Mount the hose in the whip test machine, introducing slack as specified in Table II for the size hose tested, measuring the projected length parallel to the axis of the rotating disks. The manufacturer may, at his option, adapt the fitting attachment points to permit mounting hose assemblies equipped with angled or other special fittings in the same orientation as hose assemblies equipped with straight fittings.

(d) In the case of a brake hose assembly equipped with a permanent supplemental support integrally attached to the assembly, the assembly may be mounted using the supplemental support and associated means of simulating its attachment to the vehicle. Mount the supplemental support in the same vertical and horizontal planes as the stationary header end of the whip test fixture described in S6.3.1(b). Mount or attach the supplemental support so that it is positioned in accordance with the recommendation of the assembly manufacturer for attaching the supplemental support on a vehicle.

TABLE II—HOSE LENGTHS

Free length between end fittings, inches	Slack, inches	
	⅛ inch or 3 mm hose or less	More than ⅛ inch or 3 mm hose
8 to 15½, inclusive	1.750	.....
10 to 15½, inclusive	.....	1,000
Over 15½ to 19 inclusive	1.250	.....
Over 19 to 24, inclusive	0.750	.....

S6.3.3 *Operation.* (a) Apply 235 psi water pressure and bleed all gases from the system.

(b) Drive the movable head at 800 rpm.

S6.4 *Tensile strength test.* Utilize a tension testing machine conforming to the requirements of American Society for Testing and Materials (ASTM) E4–03, ''Standard Practices for Force Verification of Testing Machines,'' and provided with a recording device to measure the force applied. This incorporation by reference was approved by the Director of the Federal Register in accordance with 5 U.S.C. 552(a) and 1 CFR Part 51. Copies may be obtained from the American Society for Testing and Materials (ASTM) International, 100 Barr Harbor Drive, P.O. Box C700, West Conshohocken, PA 19428–2959. Copies may be inspected at the National Highway Traffic Safety Administration, Technical Information Services, 400 Seventh St., S.W., Plaza Level, Room 403, Washington, D.C. 20590, or at the National Archives and Records Administration (NARA). For information on the availability of this material at NARA, call 202–741–6030, or go to: *http://www.archives.gov/federal_register/code_of_federal_regulations/ibr_locations.html.*

S6.4.1 *Preparation.* Mount the hose assembly to ensure straight, evenly distributed machine pull.

S6.4.2 *Operation.* (a) Conduct the slow pull test by applying tension at a rate of 1 inch per minute travel of the moving head until separation occurs.

(b) Conduct the fast pull test by applying tension at a rate of 2 inches per minute travel of the moving head until separation occurs.

S6.5 *Water absorption sequence tests.* (a) Prepare three brake hose assemblies and measure the free length of the hose assemblies.

(b) Immerse the brake hose assemblies in distilled water at 185 degrees Fahrenheit (85 degrees Celsius) for 70 hours. Remove the brake hose assemblies from the water and condition in air at room temperature for 30 minutes.

(c) Conduct the tests in S6.2, S6.3, and S6.4, using a different hose for each sequence.

S6.6 *Low temperature resistance test.*

S6.6.1 *Preparation.* (a) Remove hose armor, if any, and condition the hose in a straight position in air at a temperature between minus 49 degrees Fahrenheit and minus 54 degrees Fahrenheit (minus 45 degrees Celsius and minus 48 degrees Celsius) for 70 hours.

(b) Condition a cylinder in air at a temperature between minus 49 degrees Fahrenheit and minus 54 degrees Fahrenheit (minus 45 degrees Celsius and minus 48 degrees Celsius) for 70 hours, using a cylinder of 2½ inches in diameter for tests of hose less than ⅛ inch or 3mm, 3 inches in diameter for tests of ⅛ inch or 3 mm hose, 3½ inches in diameter for tests of 3/16 to ¼ inch hose or 4 mm to 6 mm hose, and 4 inches in diameter for tests of hose greater than ¼ inch or 6 mm in diameter.

S6.6.2 *Flexibility testing.* Bend the conditioned hose 180 degrees around the conditioned cylinder at a steady rate in a period of 3 to 5 seconds. Examine without magnification for cracks.

S6.7 *Brake fluid compatibility test.*

S6.7.1 *Preparation.* (a) Attach a hose assembly below a 1-pint reservoir filled with 100 ml. of SAE RM–66–04 Compatibility Fluid as shown in Figure 2. (SAE RM–66–03 Compatibility Fluid, as described in appendix A of SAE Standard J1703 NOV83, ''Motor Vehicle Brake Fluid,'' November 1983, may be used in place of SAE RM–66–04 until January 1, 1995.)

(b) Fill the hose assembly with brake fluid, seal the lower end, and place the test assembly in an oven in a vertical position.

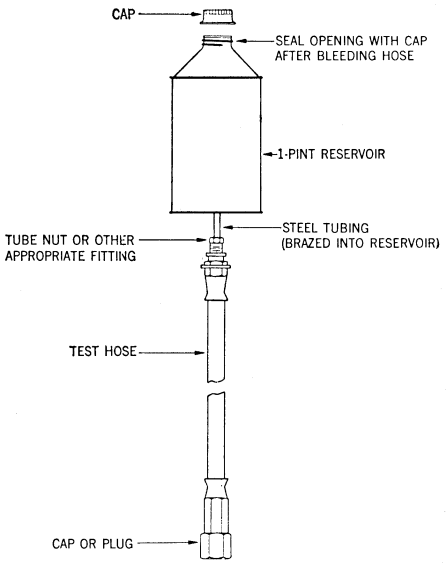

FIG. 2. BRAKE FLUID COMPATABILITY APPARATUS

S6.7.2 *Oven treatment.* (a) Condition the hose assembly at 200 °F. for 70 hours.

(b) Cool the hose assembly at room temperature for 30 minutes.

(c) Drain the brake hose assembly, immediately determine that every inside diameter of any section of the hose assembly, except for that part of an end fitting which does not contain hose, is not less than 64 percent of the nominal inside diameter of the hose, and conduct the test specified in S6.2.

S6.8 *Ozone resistance test.* Utilize a cylinder with a diameter eight times the nominal outside diameter of the brake hose excluding armor.

S6.8.1 *Preparation.* After removing any armor, bind a hydraulic brake hose 360° around the cylinder. In the case of hose shorter than the circumference of the cylinder, bend the hose so that as much of its length as possible is in contact.

S6.8.2 *Exposure to ozone.* (a) Condition the hose on the cylinder in air at room temperature for 24 hours.

(b) Immediately thereafter, condition the hose on the cylinder for 70 hours in

an exposure chamber having an ambient air temperature of 104 degrees Fahrenheit (40 degrees Celsius) during the test and containing air mixed with ozone in the proportion of 100 parts of ozone per 100 million parts of air by volume.

(c) Examine the hose for cracks under 7-power magnification, ignoring areas immediately adjacent to or within the area covered by binding.

S6.9 *End fitting corrosion resistance test.* Utilize the apparatus described in ASTM B117–64, ''Salt Spray (Fog) Testing''.

S6.9 *Dynamic ozone test.*

S6.9.1 *Apparatus.* Utilize a test apparatus shown in Figure 3 which is constructed so that:

(a) It has a fixed pin with a vertical orientation over which one end of the brake hose is installed.

(b) It has a movable pin that is oriented 30 degrees from vertical, with the top of the movable pin angled towards the fixed pin. The moveable pin maintains its orientation to the fixed pin throughout its travel in the horizontal plane. The other end of the brake hose is installed on the movable pin.

Figure 3. Dynamic Ozone Test Apparatus

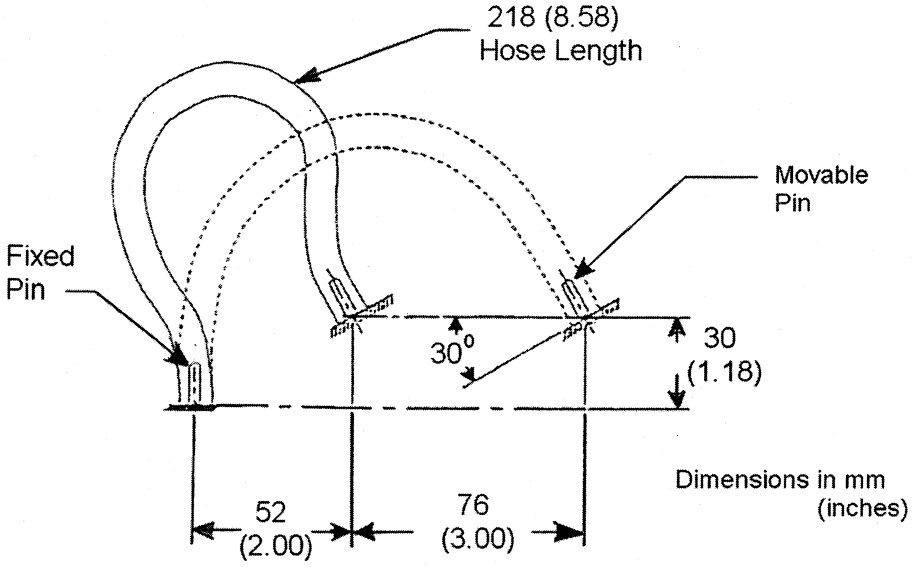

S6.9.2 *Preparation.* (a) Precondition the hose assembly by laying it on a flat surface in an unstressed condition, at room temperature, for 24 hours.

(b) Cut the brake hose assembly to a length of 8.6 inches (218 mm), such that no end fittings remain on the cut hose.

(c) Mount the brake hose onto the test fixture by fully inserting the fixture pins into each end of the hose. Secure the hose to the fixture pins using a band clamp at each end of the hose.

(d) Place the test fixture into an ozone chamber

(e) Stabilize the atmosphere in the ozone chamber so that the ambient temperature is 104 °F (40 degrees Celsius) and the air mixture contains air mixed with ozone in the proportion of 100 parts of ozone per 100 million parts of air by volume. This atmosphere is to remain stable throughout the remainder of the test.

(f) Begin cycling the movable pin at a rate of 0.3 Hz. Continue the cycling for 48 hours.

(g) At the completion of 48 hours of cycling, remove the test fixture from the ozone chamber. Without removing the hose from the test fixture, visually examine the hose for cracks without magnification, ignoring areas immediately adjacent to or within the area covered by the band clamps. Examine the hose with the movable pin at any point along its travel.

S6.10 *High temperature impulse test.*

S6.10.1 *Apparatus.* (a) A pressure cycling machine to which one end of the brake hose assembly can be attached, with the entire hose assembly installed vertically inside of a circulating air oven. The machine shall be capable of increasing the pressure in the hose from zero psi to 1600 psi, and decreasing the pressure in the hose from 1600 psi to zero psi, within 2 seconds.

(b) A circulating air oven that can reach a temperature of 295 degrees Fahrenheit (146 degrees Celsius) within 30 minutes, and that can maintain a constant 295 degrees F (146 degrees Celsius) thereafter, with the brake hose assembly inside of the oven and attached to the pressure cycling machine.

(c) A burst test apparatus to conduct testing specified in S6.2

S6.10.2 *Preparation.* (a) Connect one end of the hose assembly to the pressure cycling machine and plug the other end of the hose. Fill the pressure cycling machine and hose assembly with SAE RM–66–04 ''Compatibility Fluid,'' as described in Appendix B of SAE Standard J1703, revised JAN 1995 ''Motor Vehicle Brake Fluid,'' and bleed all gases from the system.

(b) Place the brake hose assembly inside of the circulating air oven in a vertical position. Increase the oven temperature to 295 degrees F (146 degrees Celsius) and maintain this temperature throughout the pressure cycling test.

(c) During each pressure cycle, the pressure in the hose is increased from zero psi to 1600 psi and held constant for 1 minute, then the pressure is decreased from 1600 psi to zero psi and held constant for 1 minute. Perform 150 pressure cycles on the brake hose assembly.

(d) Remove the brake hose assembly from the oven, disconnect it from the pressure cycling machine, and drain the fluid from the hose. Cool the brake hose assembly at room temperature for 45 minutes.

(e) Wipe the brake hose using acetone to remove residual Compatibility Fluid. Conduct the burst strength test in S6.2, except all sizes of hose are tested at 5,000 psi.

S6.11 *End fitting corrosion test.* Utilize the apparatus described in ASTM B117–03, ''Standard Practice for Operating Salt Spray (Fog) Apparatus''. This incorporation by reference was approved by the Director of the Federal Register in accordance with 5 U.S.C. 552(a) and 1 CFR Part 51. Copies may be obtained from the American Society for Testing and Materials (ASTM) International, 100 Barr Harbor Drive, P.O. Box C700, West Conshohocken, PA 19428–2959. Copies may be inspected at the National Highway Traffic Safety Administration, Technical Information Services, 400 Seventh St., SW., Plaza Level, Room 403, Washington, DC 20590, or at the National Archives and Records Administration (NARA). For information on the availability of this material at NARA, call (202) 741–6030, or go to: *http://www.archives.gov/federal_register/code_of_federal_regulations/ibr_locations.html.*

S6.11.1 *Construction. Construct the salt spray chamber so that:*

(a) The construction material does not affect the corrosiveness of the fog.

(b) The hose assembly is supported or suspended 30 degrees from the vertical

and parallel to the principal direction of the horizontal flow of fog through the chamber.

(c) The hose assembly does not contact any metallic material or any material capable of acting as a wick

(d) Condensation which falls from the assembly does not return to the solution reservoir for respraying.

(e) Condensation from any source does not fall on the brake hose assemblies or the solution collectors.

(f) Spray from the nozzles is not directed onto the hose assembly.

S6.11.2 *Preparation*. (a) Plug each end of the hose assembly.

(b) Mix a salt solution five parts by weight of sodium chloride to 95 parts of distilled water, using sodium chloride substantially free of nickel and copper, and containing on a dry basis not more than 0.1 percent of sodium iodide and not more than 0.3 percent total impurities. Ensure that the solution is free of suspended solids before the solution is atomized.

(c) After atomization at 95 degrees Fahrenheit (35 degrees Celsius), ensure that the collected solution is in the PH range of 6.5 to 7.2. Make the PH measurements at 77 degrees Fahrenheit (28 degrees Celsius).

(d) Maintain a compressed air supply to the nozzle or nozzles free of oil and dirt and between 10 and 25 psi.

S6.11.3 *Operation*. Subject the brake hose assembly to the salt spray continuously for 24 hours.

(a) Regulate the mixture so that each collector will collect from 1 to 2 milliliters of solution per hour for each 80 square centimeters of horizontal collecting area.

(b) Maintain exposure zone temperature at 95 degrees Fahrenheit (35 degrees Celsius).

(c) Upon completion, remove the salt deposit from the surface of the hose by washing gently or dipping in clean running water not warmer than 100 degrees Fahrenheit (38 degrees Celsius) and then drying immediately.

S6.12 *Constriction test*. Brake hose constriction test requirements shall be met using at least one of the methods specified in S6.12.1, S6.12.2, or S6.12.3.

S6.12.1 *Plug gauge*. (a) Utilize a plug gauge as shown in Figure 4. Diameter ''A'' is equal to 64 percent of the nominal inside diameter of the hydraulic brake hose being tested.

(b) Brake hose assemblies that are to be used for additional testing have constriction testing only at each end fitting. Other brake hose assemblies may be cut into 3-inch lengths to permit constriction testing of the entire assembly. Hose assemblies with end fittings that do not permit entry of the gauge (*e.g.*, restrictive orifice or banjo fitting) are cut 3 inches from the point at which the hose terminates in the end fitting and then tested from the cut end.

(c) Hold the brake hose in a straight position and vertical orientation.

(d) Place the spherical end of the plug gauge just inside the hose or end fitting. If the spherical end will not enter the hose or end fitting using no more force than gravity acting on the plug gauge, this constitutes failure of the constriction test.

(e) Release the plug gauge. Within 3 seconds, the plug gauge shall fall under the force of gravity alone up to the handle of the gauge. If the plug gauge does not fully enter the hose up to the handle of the gauge within three seconds, this constitutes failure of the constriction test.

S6.12.2 *Extended plug gauge*. (a) The test in 6.12.1 may be conducted with an extended plug gauge to enable testing of the entire brake hose from one end fitting, without cutting the brake hose. The extended plug gauge weight and spherical diameter specifications are as shown in Figure 4, but the handle portion of the gauge may be deleted and the gauge length may be greater than 3 inches.

(b) The required performance of the extended plug gauge in S6.12.1(e) is that after the plug gauge is released, the extended plug gauge shall fall under the force of gravity alone at an average rate of 1 inch per second until the spherical diameter of the extended gauge passes through all portions of the brake hose assembly containing hose. If the extended plug gauge does not pass through all portions of the brake hose assembly containing hose at an average rate of 1 inch per second, this constitutes failure of the constriction test.

FIGURE 4. CONSTRICTION TEST PLUG GAUGE

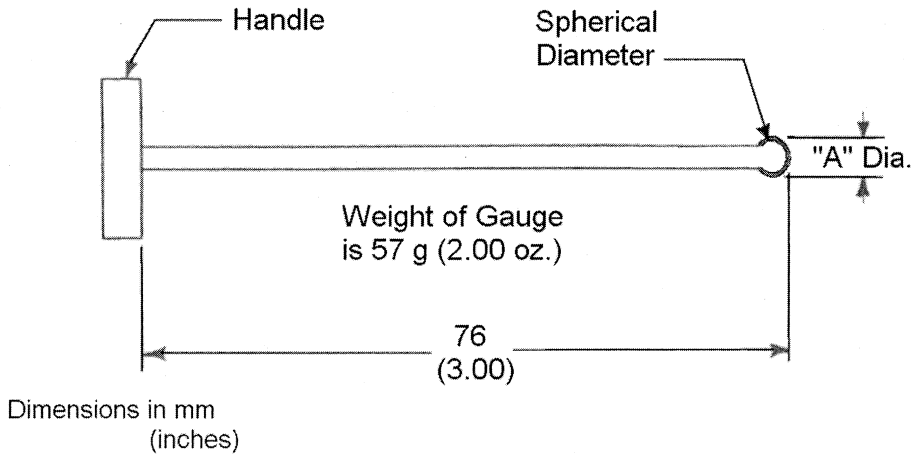

S6.12.3 *Drop ball test.* (a) Utilize a rigid spherical ball with a diameter equal to 64 percent of the nominal inside diameter of the hydraulic brake hose being tested. The weight of the spherical ball shall not exceed 2 ounces (57 grams).

(b) Hold the brake hose in a straight position and vertical orientation.

(c) Hold the ball just above the end fitting.

(d) Release the ball. The ball shall fall under the force of gravity alone completely through all portions of the brake hose assembly containing hose, at an average rate of 1 inch per second. Failure of the ball to pass completely through all portions of the brake hose assembly containing hose, at an average rate of 1 inch per second, constitutes failure of the constriction test.

S7. *Requirements—Air brake hose, brake hose assemblies, and brake hose end fittings.*

S7.1 *Construction.* Each air brake hose assembly shall be equipped with permanently attached brake hose end fittings or reusable brake hose end fittings. Each air brake hose constructed of synthetic or natural elastomeric rubber shall conform to the dimensional requirements specified in Table III, except for brake hose manufactured in metric sizes.

TABLE III—AIR BRAKE HOSE DIMENSIONS—INSIDE DIAMETER (ID) AND OUTSIDE DIAMETER (OD) DIMENSIONS IN INCHES (MILLIMETERS)

	Type A—Hose Size—Nominal Inside Diameter					
	1/4	5/16	3/8	7/16	1/2 SP [1]	5/8
Min. I.D.	0.227 (5.8)	0.289 (7.3)	0.352 (8.9)	0.407 (10.3)	0.469 (11.9)	0.594 (15.1)
Max. I.D.	0.273 (6.9)	0.335 (8.5)	0.398 (10.1)	0.469 (11.9)	0.531 (13.5)	0.656 (16.7)
Min. O.D.	0.594 (15.1)	0.656 (16.7)	0.719 (18.3)	0.781 (19.8)	0.844 (21.4)	1.031 (26.2)
Max. O.D.	0.656 (16.7)	0.719 (18.3)	0.781 (19.8)	0.843 (21.4)	0.906 (23.0)	1.094 (27.8)
	Type AI [2]—Hose Size—Nominal Inside Diameter					
	3/16	1/4	5/16	13/32	1/2	5/8
Min. I.D.	0.188 (4.8)	0.250 (6.4)	0.312 (7.9)	0.406 (10.3)	0.500 (12.7)	0.625 (15.9)
Max. I.D.	0.214 (5.4)	0.281 (7.1)	0.343 (8.7)	0.437 (11.1)	0.539 (13.7)	0.667 (16.9)
Min. O.D.	0.472 (12.0)	0.535 (13.6)	0.598 (15.1)	0.714 (18.1)	0.808 (20.5)	0.933 (23.7)
Max. O.D.	0.510 (13.0)	0.573 (14.6)	0.636 (16.2)	0.760 (19.3)	0.854 (21.7)	0.979 (24.9)
	Type AII [2]—Hose Size—Nominal Inside Diameter					
	3/16	1/4	5/16	13/32	1/2	5/8
Min. I.D.	0.188 (4.8)	0.250 (6.4)	0.312 (7.9)	0.406 (10.3)	0.500 (12.7)	0.625 (15.9)
Max. I.D.	0.214 (5.4)	0.281 (7.1)	0.343 (8.7)	0.437 (11.1)	0.539 (13.7)	0.667 (16.9)
Min. O.D.	0.500 (12.7)	0.562 (14.3)	0.656 (16.7)	0.742 (18.8)	0.898 (22.8)	1.054 (26.8)
Max. O.D.	0.539 (13.7)	0.602 (15.3)	0.695 (17.7)	0.789 (20.1)	0.945 (24.0)	1.101 (27.9)

[1] Notes: Type A, sizes 3/8, 7/16, and 1/2 Special can be assembled with reusable end fittings. All sizes can be assembled using permanently-attached (crimped) end fittings.
[2] Types AI and AII, all sizes, can be assembled with reusable or permanently-attached (crimped) end fittings.

S7.2 *Labeling*

S7.2.1 *Hose*. Each air brake hose shall be labeled, or cut from bulk hose that is labeled, at intervals of not more than 6 inches, measured from the end of one legend to the beginning of the next, in block capital letters and numerals at least one-eighth of an inch high, with the information listed in paragraphs (a) through (e) of this section. The information need not be present on hose that is sold as part of a brake hose assembly or a motor vehicle.

(a) The symbol DOT, constituting a certification by the hose manufacturer that the hose conforms to all applicable motor vehicle safety standards.

(b) A designation that identifies the manufacturer of the hose, which shall be filed in writing with: Office of Vehicle Safety Compliance, Equipment Division NVS–222, National Highway Traffic Safety Administration, 400 Seventh St. SW., Washington, DC 20590. The designation may consist of block capital letters, numerals, or a symbol.

(c) The month, day, and year, or the month and year, of manufacture, expressed in numerals. For example, 10/1/96 means October 1, 1996.

(d) The nominal inside diameter of the hose expressed in inches or fractions of inches or in millimeters. The abbreviation ''mm'' shall follow hose sizes that are expressed in millimeters. (Examples: 3/8, 1/2 (1/2SP in the case of 1/2 inch special air brake hose), 4mm, 6mm.)

(e) The type designation corresponding to the brake hose dimensions in Table III. Type A shall be labeled with the letter ''A'', Type AI shall be labeled with the letters ''AI'', and type AII shall be labeled with the

letters ''AII''. Metric air brake hose shall be labeled with the letter ''A.''

S7.2.2 *End fittings.* Except for an end fitting that is attached by deformation of the fitting about a hose by crimping or swaging, at least one component of each air brake hose fitting shall be etched, embossed, or stamped in block capital letters and numerals at least one-sixteenth of an inch high with the following information:

(a) The symbol DOT, constituting a certification by the manufacturer of that component that the component conforms to all applicable motor vehicle safety standards.

(b) A designation that identifies the manufacturer of that component of the fitting, which shall be filed in writing with: Office of Vehicle Safety Compliance, Equipment Division NVS–222, National Highway Traffic Safety Administration, 400 Seventh St. S.W., Washington, DC 20590. The designation may consist of block capital letters, numerals, or a symbol.

(c) The letter ''A'' shall indicate intended use in air brake systems. In the case of an end fitting intended for use in a reusable assembly with brake hose subject to Table III, ''AI'' or ''AII'' shall indicate use with Type I or Type II hose, respectively.

(d) The nominal inside diameter of the hose to which the fitting is properly attached expressed in inches or fractions of inches or in millimeters. (See examples in S7.2.1 (d).) The abbreviation ''mm'' shall follow hose sizes that are expressed in millimeters.

S7.2.3 *Assemblies.* Each air brake hose assembly made with end fittings that are attached by crimping or swaging, except those sold as part of a motor vehicle, shall be labeled by means of a band around the brake hose assembly as specified in this paragraph or, at the option of the manufacturer, by means of labeling as specified in S7.2.3.1. The band may at the manufacturer's option be attached so as to move freely along the length of the assembly, as long as it is retained by the end fittings. The band shall be etched, embossed, or stamped in block capital letters, numerals or symbols at least one-eighth of an inch high, with the following information:

(a) The symbol DOT, constituting certification by the hose assembler that the hose assembly conforms to all applicable motor vehicle safety standards.

(b) A designation that identifies the manufacturer of the hose assembly, which shall be filed in writing with: Office of Crash Avoidance Standards, Vehicle Dynamics Division, National Highway Traffic Safety Administration, 400 Seventh Street SW., Washington, DC 20590. The designation may consist of block capital letters, numerals or a symbol.

S7.2.3.1 At least one end fitting of an air brake hose assembly made with end fittings that are attached by crimping or swaging shall be etched, stamped or embossed with a designation at least one-sixteenth of an inch high that identifies the manufacturer of the hose assembly and is filed in accordance with S7.2.3(b).

S7.3 *Test requirements.* Each air brake hose assembly or appropriate part thereof shall be capable of meeting any of the requirements set forth under this heading, when tested under the conditions of S13 and the applicable procedures of S8. However, a particular hose assembly or appropriate part thereof need not meet further requirements after having met the constriction requirement (S7.3.1) and then having been subjected to any one of the requirements specified in S7.3.2 through S7.3.13.

S7.3.1 *Constriction.* Every inside diameter of any section of an air brake hose assembly shall not be less than 66 percent of the nominal inside diameter of the brake hose. (S8.14)

S7.3.2 *High temperature resistance.* An air brake hose shall not show external or internal cracks, charring, or disintegration visible without magnification when straightened after being bent for 70 hours at 212 degrees Fahrenheit (100 degrees Celsius) over a small test cylinder having the radius specified in Table IV for the size of hose tested. (S8.1)

S7.3.3 *Low temperature resistance.* The inside and outside surfaces of an air brake hose shall not show cracks as a result of conditioning at minus 40 degrees Fahrenheit (minus 40 degrees Celsius) for 70 hours when bent around a

large test cylinder having the radius specified in Table IV for the size of hose tested (S8.2).

TABLE IV—AIR BRAKE HOSE DIAMETERS AND TEST CYLINDER RADII

Nominal hose inside diameter, inches[1]	3/16	1/4	5/16	3/8	13/32	7/16, 1/2	5/8
Nominal hose inside diameter, millimeters[1]	4, 5	6	8	.....	10	12	16
Small test cylinder, radius in inches (millimeters)[2]	1 (25)	1½ (38)	1¾ (45)	1¾ (45)	1⅞ (48)	2 (51)	2½ (64)
Large test cylinder, radius in inches (millimeters)[3]	2 (51)	2½ (64)	3 (76)	3½ (89)	3½ (89)	4 (102)	4½ (114)

Notes:
[1] These sizes are listed to provide test cylinder radii for brake hoses manufactured in these sizes. They do not represent conversions.
[2] Small test cylinders are used for the high temperature resistance test.
[3] Large test cylinders are used for the low temperature resistance, ozone resistance, and adhesion of wire-reinforced hose tests.

S7.3.4 *Oil resistance.* After immersion in ASTM No. 3 oil for 70 hours at 212 °F. the volume of a specimen prepared from the inner tube and cover of an air brake hose shall not increase more than 100 percent (S8.3).

S7.3.5 *Ozone resistance.* An air brake hose assembly shall not show cracks visible under 7-power magnification after exposure to ozone for 70 hours at 104 degrees Fahrenheit (40 degrees Celsius) when bent around a test cylinder of the radius specified in Table IV for the size of hose tested (S8.4).

S7.3.6 *Length change.* An air brake hose shall not contract in length more than 7 percent nor elongate more than 5 percent when subjected to air pressure of 200 psi (S8.5).

S7.3.7 *Adhesion.* (a) Except for hose reinforced by wire, an air brake hose shall withstand a tensile force of 8 pounds per inch of length before separation of adjacent layers (S8.6).

(b) An air brake hose reinforced by wire shall permit a steel ball to roll freely along the entire length of the inside of the hose when the hose is subjected to a vacuum of 25 inches of Hg and bent around a test cylinder (S8.13).

S7.3.8 *Flex strength and air pressure leakage.* An air brake hose assembly of the length specified in the table accompanying Figure 5, when subjected to a flex test and internal pressure cycling, shall be capable of having its internal pressure increased from zero to 140 psi within 2 minutes with pressurized air supplied through an orifice (S8.7).

S7.3.9 *Corrosion resistance and burst strength.* An air brake hose assembly exposed to salt spray shall not rupture when exposed to hydrostatic pressure of 900 psi (S8.8).

S7.3.10 *Tensile strength.* An air brake hose assembly designed for use between a frame and axle or between a towed and towing vehicle shall withstand, without separation of the hose from its end fittings, a pull of 250 pounds if it is ¼ inch, 6 mm, or less in nominal inside diameter, or a pull of 325 pounds if it is larger than ¼ inch or 6 mm in nominal inside diameter. An air brake hose assembly designed for use in any other application shall withstand, without separation of the hose from its end fittings, a pull of 50 pounds if it is ¼ inch, 6 mm, or less in nominal inside diameter, 150 pounds if it is larger than ¼ inch or 6 mm and equal to or smaller than ½ inch or 12 mm in nominal inside diameter, or 325 pounds if it is

larger than ½ inch or 12 mm in nominal inside diameter (S8.9).

S7.3.11 *Water absorption and tensile strength.* After immersion in distilled water for 70 hours, an air brake hose assembly designed for use between a frame and axle or between a towed and a towing vehicle shall withstand, without separation of the hose from its end fittings, a pull of 250 pounds if it is ¼ inch or less or 6 mm or less in nominal inside diameter, or a pull of 325 pounds if it is larger than ¼ inch or 6 mm in nominal inside diameter. After immersion in distilled water for 70 hours, an air brake hose assembly designed for use in any other application shall withstand, without separation of the hose from its end fittings, a pull of 50 pounds if it is ¼ inch or 6 mm or less in nominal inside diameter, 150 pounds if it is larger than ¼ inch or 6 mm and equal to or smaller than ½ inch or 12 mm in nominal inside diameter, or 325 pounds if it is larger than ½ inch or 12 mm in nominal inside diameter. (S8.10)

S7.3.12 *Zinc chloride resistance.* The outer cover of an air brake hose shall not show cracks visible under 7-power magnification after immersion in a 50 percent zinc chloride aqueous solution for 200 hours (S8.11).

S7.3.13 *End fitting corrosion resistance.* After 24 hours of exposure to salt spray, air brake hose end fittings shall show no base metal corrosion on the end fitting surface except where crimping or the application of labeling information causes a displacement of the protective coating.

S8. *Test procedures—Air brake hose, brake hose assemblies, and brake hose end fittings.*

S8.1 *High temperature resistance test.*

(a) Utilize a small test cylinder with a radius specified in Table IV for the size of hose tested.

(b) Bind the hose around the cylinder and condition it in an air oven for 70 hours at 212 degrees Fahrenheit (100 degrees Celsius).

(c) Cool the hose to room temperature, remove it from the cylinder and straighten it.

(d) Without magnification, examine the hose externally and cut the hose lengthwise and examine the inner tube.

S8.2 *Low temperature resistance test.* (a) Utilize a large test cylinder with a radius specified in Table IV for the size of hose tested.

(b) Condition the cylinder and the brake hose, in a straight position, in a cold box at minus 40 °F. for 70 hours.

(c) With the hose and cylinder at minus 40 degrees Fahrenheit (minus 40 degrees Celsius), bend the hose 180 degrees around the cylinder at a steady rate in a period of 3 to 5 seconds. Remove the hose from the test cylinder and visibly examine the exterior of the hose for cracks without magnification.

(d) Allow the hose to warm at room temperature for 2 hours. All reusable end fittings are removed from the hose. All permanently-attached end fittings are cut away from the hose. Cut through one wall of the hose longitudinally along its entire length. Unfold the hose to permit examination of the interior surface. Visibly examine the interior of the hose for cracks without magnification.

S8.3 *Oil resistance test.* Utilize three test specimens and average the results.

S8.3.1 *Preparation.* Fashion a test specimen by cutting a rectangular block 2 inches long and not less than one-third of an inch in width, having a thickness of not more than one-sixteenth inch, from the brake hose and buff the specimen on both faces to ensure smooth surfaces.

S8.3.2 *Measurement.* (a) Weigh each specimen to the nearest milligram in air (W1) and in distilled water (W2) at room temperature. If wetting is necessary to remove air bubbles, dip the specimen in acetone and thoroughly rinse it with distilled water.

(b) Immerse each specimen in ASTM IRM 903 oil for 70 hours at 212 degrees Fahrenheit (100 degrees Celsius) and then cool in ASTM IRM 903 oil at room temperature for 30 to 60 minutes.

(c) Dip the specimen quickly in acetone and blot it lightly with filter paper.

(d) Weigh each specimen in a tared weighing bottle (W3) and in distilled water (W4) within five minutes of removal from the cooling liquid.

(e) Calculate the percentage increase in volume follows:

Percent of increase=

$$[(W_3 - W_4) - (W_1 - W_2)]/(W_1 - W_2) \times 100$$

S8.4 *Ozone resistance test.* Conduct the test specified in S6.8, using air brake hose, except use the large test cylinder specified in Table IV for the size of hose tested.

S8.5 *Length change test.* (a) Position a test hose in a straight, horizontal position, and apply air pressure of 10 psi thereto.

(b) Measure the hose to determine original free length.

(c) Without releasing the 10 psi, raise the air pressure to the test hose to 200 psi.

(d) Measure the hose under 200 psi to determine final free length. An elongation or contraction is an increase or decrease, respectively, in the final free length from the original free length of the hose.

S8.6 *Adhesion test for air brake hose not reinforced by wire.*

S8.6.1 *Apparatus.* A tension testing machine that is power-driven and that applies a constant rate of extension is used for measuring the force required to separate the layers of the test specimen. The apparatus is constructed so that:

(a) The recording head includes a freely rotating form with an outside diameter substantially the same as the inside diameter of the hose specimen to be placed on it.

(b) The freely rotating form is mounted so that its axis of rotation is in the plane of the ply being separated from the specimen and so that the applied force is perpendicular to the tangent of the specimen circumference at the line of separation.

(c) The rate of travel of the power-actuated grip is a uniform one inch per minute and the capacity of the machine is such that maximum applied tension during the test is not more than 85 percent nor less than 15 percent of the machine's rated capacity.

(d) The machine produces a chart with separation as one coordinate and applied tension as the other.

S8.6.2 *Preparation.* (a) Cut a test specimen of 1 inch or more in length from the hose to be tested and cut the layer to be tested of that test specimen longitudinally along its entire length to the level of contact with the adjacent layer.

(b) Peel the layer to be tested from the adjacent layer to create a flap large enough to permit attachment of the power-actuated clamp of the apparatus.

(c) Mount the test specimen on the freely rotating form with the separated layer attached to the power-actuated clamp.

S8.6.3 [Reserved]

S8.6.4 *Calculations.* (a) The adhesion value shall be the minimum force recorded on the chart excluding that portion of the chart which corresponds to the initial and final 20 percent portion along the displacement axis.

(b) Express the force in pounds per inch of length.

S8.7 *Flex strength and air pressure test.*

S8.7.1 *Apparatus.* A flex testing machine with a fixed hose assembly attachment point and a movable hose assembly attachment point, which meets the dimensional requirements of Figure 5 for the size of hose being tested. The attachment points connect to the end fittings on the hose assembly without leakage and, after the hose assembly has been installed for the flex test, are restrained from rotation. The movable end has a linear travel of 6 inches and a cycle rate of 100 cycles per minute. The machine is capable of increasing the air pressure in the hose assembly from zero to 150 psi within 2 seconds, and decreasing the air pressure in the hose assembly from 150 to zero psi within 2 seconds.

FIGURE 5. FLEX TEST APPARATUS

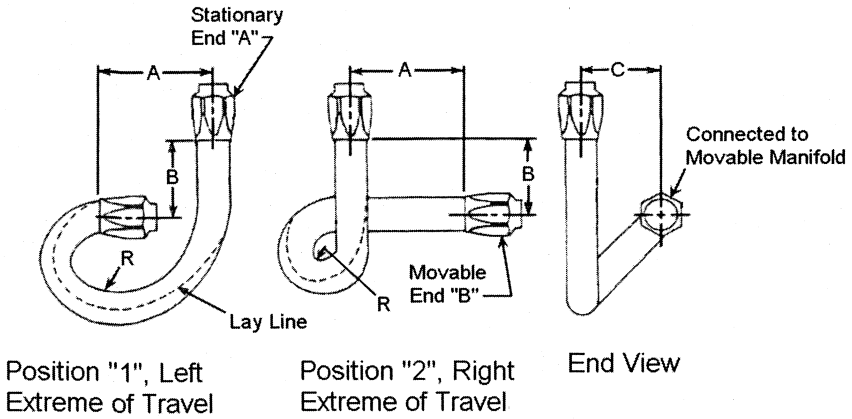

TABLE ACCOMPANYING FIGURE 5—DIMENSIONS IN INCHES (MILLIMETERS)

Free hose length	Nominal hose inside diameter	Dimensions							
		Position "1"				Position "2"			
		A	B	C	R(1)	A	B	C	R(1)
10.00 (254)	3/16, 1/4	3.00 (76)	2.75 (70)	3.75 (95)	1.40 (34)	3.00 (76)	2.75 (70)	3.75 (95)	1.20 (30)
11.00 (279)	5/16, 3/8, 13/32	3.00 (76)	3.50 (89)	4.50 (114)	1.70 (43)	3.00 (76)	3.50 (89)	4.50 (114)	1.30 (33)
14.00 (355)	7/16, 1/2, 5/8	3.00 (76)	4.00 (102)	5.00 (127)	2.20 (56)	3.00 (76)	4.00 (102)	5.00 (127)	1.80 (46)

Note (1): This is an approximate average radius.

S8.7.2 *Preparation.* (a) Lay the hose material on a flat surface in an unstressed condition. Apply a permanent marking line along the centerline of the hose on the uppermost surface.

(b) Prepare the hose assembly with a free length as shown in the table accompanying Figure 5. The end fittings shall be attached according to the end fitting manufacturer's instructions.

(c) Plug the ends of the hose assembly and conduct the salt spray test in S6.11 using an air brake hose assembly. Remove the plugs from the end fittings.

(d) Within 168 hours of completion of the salt spray test, expose the hose assembly to an air temperature of 212 degrees Fahrenheit (100 degrees Celsius) for 70 hours, with the hose in a straight position. Remove the hose and cool it at room temperature for 2 hours. Within 166 hours, subject the hose to the flexure test in S8.7.2(e).

(e) Install the hose assembly on the flex testing machine as follows. With the movable hose attachment point at the mid point of its travel, attach one end of the hose to the movable attachment point with the marked line on the hose in the uppermost position. Attach the other end of the hose to the fixed attachment point allowing the hose to follow its natural curvature.

(f) Cycle the air pressure in the hose by increasing the pressure in the hose from zero psi to 150 psi and holding constant for one minute, then decreasing the pressure from 150 psi to zero psi and holding constant for one minute. Continue the pressure cycling for the duration of the flex testing. Begin the flex testing by cycling the movable attachment point through 6 inches of travel at a rate of 100 cycles per minute. Stop the flex testing and pressure cycling after one million flex cycles have been completed.

(g) Install an orifice with a hole diameter of 0.0625 inches and a thickness of 0.032 inches in the air pressure supply line to the hose assembly. Provide a gauge or other means to measure air pressure in the hose assembly. Regulate the supply air pressure to the orifice to 150 psi.

(h) Apply 150 psi air pressure to the orifice. After 2 minutes have elapsed, measure the air pressure in the brake hose assembly, while pressurized air continues to be supplied through the orifice.

S8.8 *Corrosion resistance and burst strength test.* (a) Conduct the test specified in S6.11 using an air brake hose assembly. Remove the plugs from the ends of the hose assembly.

(b) Fill the hose assembly with water, allowing all gases to escape. Apply water pressure at a uniform rate of increase of approximately 1,000 psi per minute until the hose ruptures.

S8.9 *Tensile strength test.* Utilize a tension testing machine conforming to the requirements of American Society for Testing and Materials (ASTM) E4–03 ''Standard Practices for Force Verification of Testing Machines,'' and provided with a recording device to measure the force applied.

(a) Attach an air brake hose assembly to the testing machine to permit straight, even, machine pull on the hose. Use adapters to mount hose assemblies equipped with angled end fittings so that the hose is in a straight position when installed on the machine.

(b) Apply tension at a rate of 1 inch per minute travel of the moving head until separation occurs.

S8.10 *Water Absorption and tensile strength test.* Immerse an air brake hose assembly in distilled water at room temperature for 70 hours. Thirty minutes after removal from the water, conduct the test specified in S8.9.

S8.11 *Zinc chloride resistance test.* Immerse an air brake hose in a 50 percent zinc chloride aqueous solution at room temperature for 200 hours. Remove it from the solution and examine it under 7-power magnification for cracks.

S8.12 *End fitting corrosion resistance test.* Conduct the test specified in S6.11 using an air brake hose assembly.

S8.13 *Adhesion test for air brake hose reinforced by wire.* (a) Place a steel ball with a diameter equal to 73 percent of the nominal inside diameter of the hose being tested inside of the hose. Plug one end of the hose. Attach the other end of the hose to a source of vacuum.

(b) Subject the hose to a vacuum of 25 inches of Hg for five minutes. With the vacuum still applied to the hose, bend the hose 180 degrees around a large test cylinder with a radius specified in Table IV for the size of hose tested. At the location of this bend, bend the hose 180 degrees around the test cylinder in the opposite direction.

(c) With the vacuum still applied to the hose, return the hose to a straight position. Attempt to roll the ball inside the hose using gravity from one end of the hose to the other end.

S8.14 *Constriction test.* Perform the constriction test in S6.12 using an air brake hose, except that the spherical diameter ''A'' of the plug gauge in Figure 4, or the diameter of the rigid spherical ball in S6.12.3(a), shall be 66 percent of the nominal inside diameter of the air brake hose being tested.

S9. *Requirements—vacuum brake hose, brake hose assemblies, and brake hose end fittings.*

S9.1 *Labeling.*

S9.1.1 *Hose.* Each vacuum brake hose shall be labeled, or cut from bulk hose that is labeled, at intervals of not more than 6 inches, measured from the end of one legend to the beginning of the next, in block capital letters and numerals at least one-eighth of an inch high, with the information listed in paragraphs (a) through (e) of this section. The information need not be present on hose that is sold as part of

a brake hose assembly or a motor vehicle. (a) The symbol DOT, constituting a certification by the hose manufacturer that the hose conforms to all applicable motor vehicle safety standards.

(b) A designation that identifies the manufacturer of the hose, which shall be filed in writing with: Office of Crash Avoidance Standards, Vehicle Dynamics Division, National Highway Traffic Safety Administration, 400 Seventh Street, SW., Washington, DC 20590. The designation may consist of block capital letters, numerals or a symbol.

(c) The month, day, and year, or the month and year, of manufacture, expressed in numerals. For example, 10/1/96 means October 1, 1996.

(d) The nominal inside diameter of the hose expressed in inches or fractions of inches or in millimeters, or the nominal outside diameter of plastic tubing expressed in inches or fractions of inches or in millimeters followed by the letters OD. The abbreviation ''mm'' shall follow hose sizes that are expressed in millimeters. (Example of inside diameter: 7⁄32, ¼, 4 mm. Example of outside diameter: ¼ OD, 12 mm OD.)

(e) The letters ''VL'' or ''VH'' shall indicate that the component is a light-duty vacuum brake hose or heavy-duty vacuum brake hose, respectively.

S9.1.2 *End fittings*. Except for an end fitting that is attached by heat shrinking or by interference fit with plastic vacuum hose or that is attached by deformation of the fitting about a hose by crimping or swaging, at least one component of each vacuum brake hose fitting shall be etched, embossed, or stamped in block capital letters and numerals at least one-sixteenth of an inch high with the following information:

(a) The symbol DOT, constituting a certification by the manufacturer of that component that the component conforms to all applicable motor vehicle safety standards.

(b) A designation that identifies the manufacturer of that component of the fitting, which shall be filed in writing with: Office of Crash Avoidance Standards, Vehicle Dynamics Division, National Highway Traffic Safety Administration, 400 Seventh Street, SW., Washington, DC 20590. The designation may consist of block capital letters, numerals or a symbol.

(c) The letters ''VL'' or ''VH'' shall indicate that the end fitting is intended for use in a light-duty or heavy-duty vacuum brake system, respectively.

(d) The nominal inside diameter of the hose to which the fitting is properly attached expressed in inches or fractions of inches or in millimeters, or the outside diameter of the plastic tubing to which the fitting is properly attached expressed in inches or fraction of inches or in millimeters followed by the letter OD (See examples in S9.1.1(d)). The abbreviation ''mm'' shall follow hose sizes that are expressed in millimeters.

S9.1.3 *Assemblies*. Each vacuum brake hose assembly made with end fittings that are attached by crimping or swaging and each plastic tube assembly made with end fittings that are attached by heat shrinking or dimensional interference fit, except those sold as part of a motor vehicle, shall be labeled by means of a band around the brake hose assembly as specified in this paragraph or, at the option of the manufacturer, by means of labeling as specified in S9.1.3.1. The band may at the manufacturer's option be attached so as to move freely along the length of the assembly, as long as it is retained by the end fittings. The band shall be etched, embossed, or stamped in block capital letters, numerals or symbols at least one-eighth of an inch high, with the following information:

(a) The symbol DOT, constituting certification by the hose assembler that the hose assembly conforms to all applicable motor vehicle safety standards.

(b) A designation that identifies the manufacturer of the hose assembly, which shall be filed in writing with: Office of Crash Avoidance Standards, Vehicle Dynamics Division, National Highway Traffic Safety Administration, 400 Seventh Street SW., Washington, DC 20590. The designation may consist of block capital letters, numerals or a symbol.

S9.1.3.1 At least one end fitting of a vacuum brake hose assembly made with end fittings that are attached by crimping or swaging, or of a plastic

tubing assembly made with end fittings that are attached by heat shrinking or dimensional interference fit shall be etched, stamped or embossed with a designation at least one-sixteenth of an inch high that identifies the manufacturer of the hose assembly and is filed in accordance with S9.1.3(b).

S9.2 *Test requirements*. Each vacuum brake hose assembly or appropriate part thereof shall be capable of meeting any of the requirements set forth under this heading, when tested under the conditions of S13 and the applicable procedures of S10. However, a particular hose assembly or appropriate part thereof need not meet further requirements after having met the constriction requirement (S9.2.1) and then having been subjected to any one of the requirements specified in S9.2.2 through S9.2.10.

S9.2.1 *Constriction*. Except for that part of an end fitting which does not contain hose, every inside diameter of any section of a vacuum brake hose assembly shall not be less than 75 percent of the nominal inside diameter of the hose if for heavy duty, or 70 percent of the nominal inside diameter of the hose if for light duty (S10.11).

S9.2.2 *High temperature resistance*. A vacuum brake hose tested under the conditions specified in S10.1:

(a) Shall not have collapse of the outside diameter exceeding 10 percent of the initial outside diameter for a heavy-duty vacuum brake hose, or exceeding 15 percent of the initial outside diameter for a light-duty vacuum brake hose;

(b) Shall not show external cracks, charring, or disintegration visible without magnification, and;

(c) Shall not leak when subjected to a hydrostatic pressure test.

S9.2.3 *Low temperature resistance*. A vacuum brake hose tested under the conditions specified in S10.2 shall:

(a) Not show cracks visible without magnification after conditioning at minus 40 degrees Fahrenheit (minus 40 degrees Celsius) for 70 hours when bent around a cylinder having the radius specified in Table V for the size hose tested; and

(b) Not leak when subjected to a hydrostatic pressure test (S10.1(e)).

S9.2.4 *Ozone resistance*. A vacuum brake hose shall not show cracks visible under 7-power magnification after exposure to ozone for 70 hours (S10.3).

S9.2.5 *Burst strength*. A vacuum brake hose shall not rupture under hydrostatic pressure of 350 psi (S10.4).

S9.2.6 *Vacuum*. The collapse of the outside diameter of a vacuum brake hose under internal vacuum of 26 inches of Hg. for five minutes shall not exceed one-sixteenth of an inch (S10.5).

S9.2.7 *Bend*. The collapse of the outside diameter of a vacuum brake hose, other than a preformed vacuum brake hose, at the middle point of the test length when bent until the ends touch shall not exceed the values given in Table V for the size of hose tested (S10.6).

TABLE V—VACUUM BRAKE HOSE TEST REQUIREMENTS

Hose inside diameter*		High temperature resistance		Low temperature resistance		Bend		Deformation—collapsed inside diameter (dimension D), inches
Inches	Millimeters	Hose length, inches	Radius of cylinder, inches	Hose length, inches	Radius of cylinder, inches	Hose length, inches	Maximum collapse of outside diameter, inches	
7/32	5	8	1½	17½	3	7	11/64	3/64
¼	6	9	1½	17½	3	8	3/32	1/16
9/32	.....	9	1¾	19	3½	9	12/64	4/64
11/32	8	9	1¾	19	3½	11	13/64	5/64
⅜	10	10	1¾	19	3½	12	5/32	3/32
7/16	.....	11	2	20½	4	14	17/64	5/64
15/32	.....	11	2	20½	4	14	17/64	5/64
½	12	11	2	20½	4	16	7/32	⅛
⅝	16	12	2¼	22	4½	22	7/32	5/32
¾	.....	14	2½	24	5	28	7/32	3/16
1	.....	16	3¼	28½	6½	36	9/32	¼

*These sizes are listed to provide test values for brake hoses manufactured in these sizes. They do not represent conversions.

S9.2.8 *Swell and adhesion.* Following exposure to Reference Fuel B, every inside diameter of any section of a vacuum brake hose shall not be less than 75 percent of the nominal inside diameter of the hose if for heavy duty, or 70 percent of the nominal inside diameter of the hose if for light duty. The vacuum brake hose shall show no leakage in a vacuum test of 26 inches of Hg for 10 minutes. A vacuum hose that is constructed of two or more layers shall withstand a force of 6 pounds per inch of length before separation of adjacent layers. (S10.7).

S9.2.9 *Deformation.* A vacuum brake hose shall return to 90 percent of its original outside diameter within 60 seconds after five applications of force as specified in S10.8, except that a wire-reinforced hose need only return to 85 percent of its original outside diameter. In the case of a heavy duty hose, the first application of force shall not exceed a peak value of 70 pounds, and the fifth application of force shall reach a peak value of at least 40 pounds. In the case of light duty hose the first application of force shall not exceed a peak value of 50 pounds, and the fifth application of force shall reach a peak value of at least 20 pounds (S10.9).

S9.2.10 *End fitting corrosion resistance.* After 24 hours of exposure to salt spray, vacuum brake hose end fittings shall show no base metal corrosion of the end fitting surface except where crimping or the application of labeling information has caused displacement of the protective coating. (S10.10).

S10. *Test procedures—Vacuum brake hose, brake hose assemblies, and brake hose end fittings.*

S10.1 *High temperature resistance test.* (a) Measure the initial outside diameter of the hose.

(b) Subject the hose to an internal vacuum of 26 inches of Hg at an ambient temperature of 257 degrees Fahrenheit (125 degrees Celsius) for a period of 96 hours. Remove the hose to room temperature and atmospheric pressure.

(c) Within 5 minutes of completion of the conditioning in S10.1(b), measure the outside diameter at the point of greatest collapse and calculate the percentage collapse based on the initial outside diameter.

(d) Cool the hose at room temperature for 5 hours. Bend the hose around a mandrel with a diameter equal to five times the initial outside diameter of the hose. Examine the exterior of the hose for cracks, charring, or disintegration visible without magnification. Remove the hose from the mandrel.

(e) Fill the hose assembly with water, allowing all gases to escape. Apply water pressure in the hose of 175 psi within 10 seconds. Maintain an internal hydrostatic pressure of 175 psi for one minute and examine the hose for visible leakage.

S10.2 *Low temperature resistance test.* (a) Conduct the test specified in S8.2(a) through (c) using vacuum brake hose with the cylinder radius specified in Table V for the size of hose tested.

(b) Remove the hose from the test cylinder, warm the hose at room temperature for 5 hours, and conduct the hydrostatic pressure test in S10.1(e).

S10.3 *Ozone resistance test.* Conduct the test specified in S6.8 using vacuum brake hose.

S10.4 *Burst strength test.* Conduct the test specified in S8.8 using vacuum brake hose.

S10.5 *Vacuum test.* Utilize a 12-inch vacuum brake hose assembly sealed at one end. (a) Measure the hose outside diameter.

(b) Attach the hose to a source of vacuum and subject it to a vacuum of 26 inches of Hg for 5 minutes.

(c) Measure the hose to determine the minimum outside diameter while the hose is still subject to vacuum.

S10.6 *Bend test.* (a) Bend a vacuum brake hose, of the length prescribed in Table V, in the direction of its normal curvature until the ends just touch as shown in Figure 6.

(b) Measure the outside diameter of the specimen at point A before and after bending.

(c) The difference between the two measurements is the collapse of the hose outside diameter on bending.

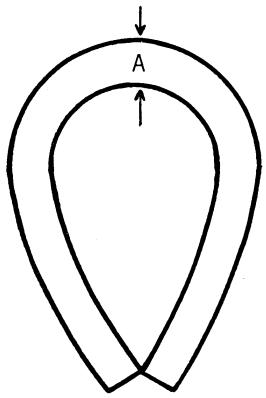

FIG. 6—BEND TEST OF VACUUM BRAKE HOSE.

S10.7 *Swell and adhesion test.* (a) Fill a specimen of vacuum brake hose 12 inches long with ASTM Reference Fuel B as described in ASTM D471–98ε[1] Standard Test Method for Rubber Property—Effect of Liquids. This incorporation by reference was approved by the Director of the Federal Register in accordance with 5 U.S.C. 552(a) and 1 CFR part 51. Copies may be obtained from the American Society for Testing and Materials (ASTM) International, 100 Barr Harbor Drive, P.O. Box C700, West Conshohocken, PA 19428–2959. Copies may be inspected at the National Highway Traffic Safety Administration, Technical Information Services, 400 Seventh St., SW., Plaza Level, Room 403, Washington, DC 20590, or at the National Archives and Records Administration (NARA). For information on the availability of this material at NARA, call 202–741–6030, or go to: *http://www.archives.gov/federal_register/code_of_federal_regulations/ibr_locations.html.*

(b) Maintain reference fuel in the hose under atmospheric pressure at room temperature for 48 hours.

(c) Remove fuel and conduct the constriction test in S10.11.

(d) Attach the hose to a source of vacuum and subject it to a vacuum of 26 inches of Hg for 10 minutes. Remove the hose from the vacuum source.

(e) For a vacuum brake hose constructed of two or more layers, conduct the test specified in S8.6 using the vacuum brake hose.

S10.8 [Reserved]

S10.9 *Deformation test.* Table VI specifies the test specimen dimensions.

S10.9.1 *Apparatus.* Utilize a compression device, equipped to measure force of at least 100 pounds, and feeler gages of sufficient length to be passed completely through the test specimen.

S10.9.2 *Operation.* (a) Position the test specimen longitudinally in the compression device with the fabric laps not in the line of the applied pressure.

TABLE VI—DIMENSIONS OF TEST SPECIMEN AND FEELER GAGE FOR DEFORMATION TEST

Hose inside diameter*		Specimen dimensions (see Fig. 7)		Feeler gage dimensions	
in.	mm	Depth (inch)	Length (inch)	Width (inch)	Thickness (inch)
7/32	5	3/64	1	1/8	3/64
1/4	6	1/16	1	1/8	1/16
9/32	.....	1/16	1	1/8	1/16
11/32	8	5/64	1	3/16	5/64
3/8	10	3/32	1	3/16	3/32
7/16	.....	5/64	1	1/4	5/64
15/32	.....	5/64	1	1/4	5/64
1/2	12	1/8	1	1/4	1/8
5/8	16	5/32	1	1/4	5/32
3/4	.....	3/16	1	1/4	3/16
1	.....	1/4	1	1/4	1/4

*These sizes are listed to provide test values for brake hoses manufactured in these sizes. They do not represent conversions.

(b) Apply gradually increasing force to the test specimen to compress its inside diameter to that specified in Table VI (dimension D of Figure 7) for the size of hose tested.

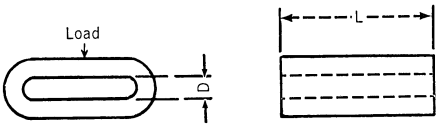

FIG. 7—DEFORMED SPECIMEN OF VACUUM BRAKE HOSE

(c) After 5 seconds release the force and record the peak load applied.

(d) Repeat the procedure four times permitting a 10-second recovery period between load applications.

S10.10 *End fitting corrosion resistance test.* Conduct the test specified in S6.11 using a vacuum brake hose assembly.

S10.11 *Constriction test.* Perform the constriction test in S6.12 using a vacuum brake hose, except that the spherical diameter ''A'' of the plug gauge in Figure 4, or the diameter of the rigid

spherical ball in S6.12.3(a), shall be 75 percent of the nominal inside diameter of the vacuum brake hose if it is heavy duty, or 70 percent of the nominal inside diameter of the vacuum brake hose if it is light duty.

S11. *Requirements—Plastic air brake tubing, plastic air brake tubing assemblies, and plastic air brake tubing end fittings.*

11.1 *Construction.* Each plastic air brake tubing assembly shall be equipped with permanently attached end fittings or reusable end fittings. Plastic air brake tubing shall conform to the dimensional requirements specified in Table VII. (S12.1)

TABLE VII—PLASTIC AIR BRAKE TUBING DIMENSIONS

Nominal tubing outside diameter	Maximum outside diameter		Minimum outside diameter		Nominal inside diameter		Nominal wall thickness		Wall thickness tolerance	
	mm	inches	mm	inches	mm	inches	mm	inches	mm	inches
1/8 inch	3.25	0.128	3.10	0.122	2.01	0.079	0.58	0.023	0.08	0.003
5/32 inch	4.04	0.159	3.89	0.153	2.34	0.092	0.81	0.032	0.08	0.003
3/16 inch	4.83	0.190	4.67	0.184	2.97	0.117	0.89	0.035	0.08	0.003
1/4 inch	6.43	0.253	6.27	0.247	4.32	0.170	1.02	0.040	0.08	0.003
5/16 inch	8.03	0.316	7.82	0.308	5.89	0.232	1.02	0.040	0.10	0.004
3/8 inch	9.63	0.379	9.42	0.371	6.38	0.251	1.57	0.062	0.10	0.004
1/2 inch	12.83	0.505	12.57	0.495	9.55	0.376	1.57	0.062	0.10	0.004
5/8 inch	16.00	0.630	15.75	0.620	11.20	0.441	2.34	0.092	0.13	0.005
3/4 inch	19.18	0.755	18.92	0.745	14.38	0.566	2.34	0.092	0.13	0.005
6 mm	6.10	0.240	5.90	0.232	4.00	0.157	1.00	0.039	0.10	0.004
8 mm	8.10	0.319	7.90	0.311	6.00	0.236	1.00	0.039	0.10	0.004
10 mm	10.13	0.399	9.87	0.389	7.00	0.276	1.50	0.059	0.10	0.004
12 mm	12.13	0.478	11.87	0.467	9.00	0.354	1.50	0.059	0.10	0.004
16 mm	16.13	0.635	15.87	0.625	12.00	0.472	2.00	0.079	0.13	0.005

S11.2 *Labeling.*

S11.2.1 *Plastic air brake tubing.* Plastic air brake tubing shall be labeled, or cut from bulk tubing that is labeled, at intervals of not more than 6 inches, measured from the end of one legend to the beginning of the next, in block capital letters and numerals at least one-eighth of an inch high, with the information listed in paragraphs (a) through (e) of this section. The information need not be present on tubing that is sold as part of a motor vehicle.

(a) The symbol DOT, constituting a certification by the hose manufacturer that the hose conforms to all applicable motor vehicle safety standards.

(b) A designation that identifies the manufacturer of the tubing, which shall be filed in writing with: Office of Vehicle Safety Compliance, Equipment Division NVS–222, National Highway Traffic Safety Administration, 400 Seventh St. SW., Washington, DC 20590. The designation may consist of block capital letters, numerals, or a symbol.

(c) The month, day, and year, or the month and year, of manufacture, expressed in numerals. For example, 10/1/96 means October 1, 1996.

(d) The nominal outside diameter expressed in inches or fractions of inches or in millimeters followed by the letters OD. The abbreviation ''mm'' shall follow tubing sizes that are expressed in millimeters. (Examples: 3/8 OD, 6 mm OD.)

(e) The letter ''A'' shall indicate intended use in air brake systems.

S11.2.2 *End fittings.* Except for an end fitting that is attached by deformation of the fitting about the tubing by crimping or swaging, at least one component of each plastic air brake tubing end fitting shall be etched, embossed, or stamped in block capital letters and numerals at least one-sixteenth of an inch high with the following information:

(a) The symbol DOT, constituting a certification by the manufacturer that the end fitting conforms to all applicable motor vehicle safety standards.

(b) A designation that identifies the manufacturer of the end fitting, which shall be filed in writing with: Office of Vehicle Safety Compliance, Equipment Division NVS–222, National Highway Traffic Safety Administration, 400 Seventh St. SW., Washington, DC 20590.

The designation may consist of block capital letters, numerals, or a symbol.

(c) The letter ''A'' shall indicate intended use in air brake systems.

(d) The nominal outside diameter of the plastic tubing to which the fitting is properly attached expressed in inches or fractions of inches or in millimeters followed by the letters OD. The abbreviation ''mm'' shall follow tubing sizes that are expressed in millimeters. (Examples: ⅜ OD, 6 mm OD)

S11.2.3. *Assemblies*. Each plastic air brake tubing assembly made with end fittings that are attached by crimping or swaging, except those sold as part of a motor vehicle, shall be labeled by means of a band around the brake tubing assembly as specified in this paragraph or, at the option of the manufacturer, by means of labeling as specified in S11.2.3.1. The band may at the manufacturer's option be attached so as to move freely along the length of the assembly, as long as it is retained by the end fittings. The band shall be etched, embossed, or stamped in block capital letters, numerals or symbols at least one-eighth of an inch high, with the following information:

(a) The symbol DOT, constituting certification by the tubing assembler that the tubing assembly conforms to all applicable motor vehicle safety standards.

(b) A designation that identifies the manufacturer of the hose assembly, which shall be filed in writing with: Office of Vehicle Safety Compliance, Equipment Division NVS–222, National Highway Traffic Safety Administration, 400 Seventh St. SW., Washington, DC 20590. The designation may consist of block capital letters, numerals, or a symbol.

S11.2.3.1 At least one end fitting of a plastic air brake tubing assembly made with end fittings that are attached by crimping or swaging shall be etched, stamped, or embossed with a designation at least one-sixteenth of an inch high that identifies the manufacturer of the tubing assembly and is filed in accordance with S11.2.3(b).

S11.3 *Test requirements*. Each plastic air brake tubing assembly or appropriate part thereof shall be capable of meeting any of the requirements set forth under this heading, when tested under the conditions of S13 and the applicable procedures of S12. However, a particular tubing assembly or appropriate part thereof need not meet further requirements after having met the constriction requirement (S11.3.1) and then having been subjected to any one of the requirements specified in S11.3.2 through S11.3.24. Unless otherwise specified, testing is conducted on a sample of tubing 12 inches in length.

S11.3.1 *Constriction*. Every inside diameter of any section of a plastic air brake tubing assembly shall not be less than 66 percent of the nominal inside diameter of the brake tubing. (S12.2)

S11.3.2 *High temperature conditioning and dimensional stability*. Plastic air brake tubing shall conform to the dimensions in Table VII after conditioning in air at 230 degrees Fahrenheit (110 degrees Celsius) for four hours. (S12.3)

S11.3.3 *Boiling water conditioning and dimensional stability*. Plastic air brake tubing shall conform to the dimensions in Table VII after conditioning in boiling water for two hours. (S12.4)

S11.3.4 *Burst Strength*. Plastic air brake tubing shall not rupture when subjected to the burst strength pressure in Table VIII for the size of tubing being tested. (S12.5)

S11.3.5 *Moisture absorption and burst strength*. Plastic air brake tubing shall not rupture when subjected to 80 percent of the burst strength pressure in Table VIII, after the tubing has been dried in an oven and then conditioned in a 100 percent relative humidity atmosphere at 75 degrees Fahrenheit (24 degrees Celsius) for 100 hours. (S12.6)

TABLE VIII—PLASTIC AIR BRAKE TUBING MECHANICAL PROPERTIES

Nominal tubing OD	Burst strength pressure		Supported bend radius [1]		Unsupported bend radius [2]		Conditioned tensile load	
	kPa	Psi	Mm	inches	mm	inches	N	lbf
⅛ inch	6900	1000	9.4	0.37	9.4	0.37	156	35
5/32 inch	8300	1200	12.7	0.50	12.7	0.50	178	40
3/16 inch	8300	1200	19.1	0.75	19.1	0.75	222	50

TABLE VIII—PLASTIC AIR BRAKE TUBING MECHANICAL PROPERTIES—Continued

Nominal tubing OD	Burst strength pressure		Supported bend radius [1]		Unsupported bend radius [2]		Conditioned tensile load	
	kPa	Psi	Mm	inches	mm	inches	N	lbf
¼ inch	8300	1200	25.4	1.00	25.4	1.00	222	50
5/16 inch	6900	1000	31.8	1.25	38.1	1.50	334	75
⅜ inch	9700	1400	38.1	1.50	38.1	1.50	667	150
½ inch	6600	950	50.8	2.00	63.5	2.50	890	200
⅝ inch	6200	900	63.5	2.50	76.2	3.00	1446	325
¾ inch	5500	800	76.2	3.00	88.9	3.50	1557	350
6 mm	7600	1100	20.0	0.75	25.4	1.00	222	50
8 mm	6200	900	31.8	1.25	38.1	1.50	334	75
10 mm	8200	1200	38.1	1.50	38.1	1.50	667	150
12 mm	6900	1000	44.5	1.75	63.5	2.50	890	200
16 mm	6000	875	69.9	2.75	76.2	3.00	1446	325

NOTES: (1) Supported bend radius for tests specifying cylinders around which the tubing is bent. (2) Unsupported bend radius for the collapse resistance test in which the tubing is not supported by a cylinder during bending.

S11.3.6 *Ultraviolet light resistance.* Plastic air brake tubing shall not rupture when subjected to 80 percent of the burst strength pressure in Table VIII for the size of tubing being tested, after being exposed to ultraviolet light for 300 hours and then impacted with a one pound weight dropped from a height of 12 inches. (S12.7)

S11.3.7 *Low temperature flexibility.* The outer surface of plastic air brake tubing shall not show cracks visible without magnification as a result of conditioning in air at 230 degrees Fahrenheit (110 degrees Celsius) for 24 hours, and then conditioning in air at minus 40 degrees Fahrenheit (minus 40 degrees Celsius) for four hours, and then bending the tubing 180 degrees around a test cylinder having a radius equal to six times the nominal outside diameter of the tubing. (S12.8)

S11.3.8 *High temperature flexibility.* Plastic air brake tubing shall not rupture or burst when subjected to 80 percent of the burst strength pressure in Table VIII for the size of tubing being tested, after the tubing has been:

(a) Conditioned in air at 230 degrees Fahrenheit (110 degrees Celsius) for 72 hours while bent 180 degrees around a cylinder having a radius equal to the supported bend radius in Table VIII for the size of tubing being tested; and

(b) Cooled to room temperature while remaining on the cylinder, then straightened; and

(c) Bent 180 degrees around the cylinder in the opposite direction of the first bending. (S12.9)

S11.3.9 *High temperature resistance.* Plastic air brake tubing shall not rupture or burst when subjected to 80 percent of the burst strength pressure in Table VIII for the size of tubing being tested, after the tubing has been conditioned in air at 230 degrees Fahrenheit (110 degrees Celsius) for 72 hours. (S12.10)

S11.3.10 *High temperature conditioning, low temperature impact resistance.* Plastic air brake tubing shall not rupture or burst when subjected to 80 percent of the burst strength pressure in Table VIII for the size of tubing being tested, after the tubing has been conditioned in air at 230 degrees Fahrenheit (110 degrees Celsius) for 24 hours, then conditioned in air at minus 40 degrees Fahrenheit (minus 40 degrees Celsius) for 4 hours and impacted with a one pound weight dropped from a height of 12 inches. (S12.11)

S11.3.11 *Boiling water conditioning, low temperature impact resistance.* Plastic air brake tubing shall not rupture when subjected to 80 percent of the burst strength pressure in Table VIII for the size of tubing being tested, after the tubing has been conditioned in boiling water for two hours, then conditioned in air at minus 40 degrees Fahrenheit (minus 40 degrees Celsius) for 4 hours, and then impacted with a one pound weight dropped from a height of 12 inches. (S12.12)

S11.3.12 *Zinc chloride resistance.* The outer surface of plastic air brake tubing shall not show cracks visible under 7-power magnification after immersion in a 50 percent zinc chloride aqueous

solution for 200 hours while bent around a cylinder having a radius equal to the supported bend radius in Table VIII for the size of tubing tested. (S12.13)

S11.3.13 *Methyl alcohol resistance.* The outer surface of plastic air brake tubing shall not show cracks visible under 7-power magnification after immersion in a 95 percent methyl alcohol aqueous solution for 200 hours while bent around a cylinder having a radius equal to the supported bend radius in Table VIII for the size of tubing tested. (S12.14)

S11.3.14 *High temperature conditioning and collapse resistance.* The collapse of the outside diameter of plastic air brake tubing shall not exceed twenty percent of the original outside diameter when bent 180 degrees on a holding fixture to the unsupported bend radius specified in Table VIII and conditioned in air at 200 degrees Fahrenheit (93 degrees Celsius) for 24 hours. (S12.15)

S11.3.15 *Ozone resistance.* The outer surface of plastic air brake tubing shall not show cracks visible under 7-power magnification after exposure to ozone for 70 hours at 104 degrees Fahrenheit (40 degrees Celsius). (S12.16)

S11.3.16 *Oil resistance.* Plastic air brake tubing shall not rupture when subjected to 80 percent of the burst strength pressure in Table VIII for the size of tubing being tested, after the tubing has been conditioned in ASTM IRM 903 oil at 212 degrees Fahrenheit (100 degrees Celsius) for 70 hours. (S12.17)

S11.3.17 *Tensile strength.* A plastic air brake tubing assembly designed for use between frame and axle or between a towed and a towing vehicle shall withstand, without separation of the tubing from its end fittings, a pull of 250 pounds if it is ⅜ inch, 10 mm, or less in nominal outside diameter, or a pull of 325 pounds if it is larger than ⅜ inch or 10 mm in nominal outside diameter. A plastic air brake tubing assembly designed for use in any other application shall withstand, without separation of the hose from its end fittings, a pull of 35 pounds if it is ⅛ inch, 3 mm, or less in nominal outside diameter, 40 pounds if it is 5⁄32 inch or 4 mm in nominal outside diameter, 50 pounds if it is 3⁄16 to ⅜ inch or 5 mm to 10 mm in nominal outside diameter, 150 pounds if it is ½ to ⅝ inch or 11 mm to 16 mm in nominal outside diameter, or 325 pounds if it is larger than ⅝ inch or 16 mm in nominal outside diameter. (S12.18)

S11.3.18 *Boiling water conditioning and tensile strength.* A plastic air brake tubing assembly when subjected to a tensile pull test shall either elongate 50 percent or withstand the conditioned tensile load in Table VIII without separation from its end fittings, with one end of the assembly conditioned in boiling water for 5 minutes. (S12.19)

S11.3.19 *Thermal conditioning and tensile strength.* A plastic air brake tubing assembly when subjected to a tensile pull test shall either elongate 50 percent or withstand the conditioned tensile load in Table VIII without separation from its end fittings after the assembly has been subjected to four cycles of conditioning in air at minus 40 degrees Fahrenheit (minus 40 degrees Celsius) for thirty minutes, normalizing at room temperature, conditioning in boiling water for 15 minutes, and normalizing at room temperature. (S12.20)

S11.3.20 *Vibration resistance.* A plastic air brake tubing assembly with an internal air pressure of 120 psig shall not rupture or leak more than 50 cm^3 per minute at a temperature of minus 40 degrees Fahrenheit (minus 40 degrees Celsius) and 25 cm^3 per minute at a temperature of 75 degrees Fahrenheit (24 degrees Celsius), after the assembly has been subjected to 1,000,000 cycles of vibration testing with one end of the assembly fixed and the other end stroked ½-inch at 600 cycles per minute. In addition, end fittings that use a threaded retention nut shall retain at least 20 percent of the original retention nut tightening torque upon completion of the vibration testing. The vibration test shall be conducted in an environmental chamber and the air temperature shall be cycled between minus 40 degrees Fahrenheit (minus 40 degrees Celsius) and 220 degrees Fahrenheit (104 degrees Celsius) during the test. (S12.21)

S11.3.21 *End fitting retention.* The end fittings of a plastic air brake tubing assembly shall not rupture when the assembly is filled with water and pressurized to the burst strength pressure in Table VIII. (S12.22)

S11.3.22 *Thermal conditioning and end fitting retention.* The end fittings of a plastic air brake tubing assembly shall not rupture when the tubing assembly is filled with ASTM IRM 903 oil and:

(a) Conditioning in air at 200 degrees Fahrenheit (93 degrees Celsius) for 24 hours with atmospheric pressure inside the tubing assembly; and

(b) Increasing the pressure inside the tubing assembly to 450 psi, and holding this pressure for five minutes while maintaining an air temperature of 200 degrees Fahrenheit (93 degrees Celsius); and

(c) Reducing the pressure inside the tubing assembly to atmospheric and permitting the tubing assembly to cool at 75 degrees Fahrenheit (24 degrees Celsius) for 1 hour; and

(d) Conditioning the tubing assembly in air at minus 40 degrees Fahrenheit (minus 40 degrees Celsius) for 24 hours with atmospheric pressure inside the tubing assembly; and

(e) Increasing the pressure inside the tubing assembly to 450 psi, and holding this pressure for five minutes while maintaining an air temperature of minus 40 degrees Fahrenheit (minus 40 degrees Celsius). (S12.23)

S11.3.23 *End fitting serviceability.* A plastic air brake end fitting that uses a threaded retention nut shall not rupture or leak more than 25 cm^3 per minute when pressurized to 120 psi after five assembly cycles. (S12.24)

S11.3.24 *End fitting corrosion resistance.* After 24 hours of exposure to salt spray, air brake hose end fittings shall show no base metal corrosion on the end fitting surface except where crimping or the application of labeling information causes a displacement of the protective coating. (S12.25)

S12. *Test procedures—Plastic air brake tubing, plastic air brake tubing assemblies, plastic air brake tubing end fittings.*

S12.1 *Air brake tubing dimensions.* Measure the tubing dimensions including wall thickness, inside diameter, and outside diameter, using appropriate metrology apparatus such as micrometers, dial indicators and gauges, or optical comparators. To account for slight out-of-round conditions, diameter measurements may be calculated using the average of the major and minor diameters.

S12.2 *Constriction test.* Perform the constriction test in S6.12 using an air brake tubing assembly, except that the spherical diameter ''A'' of the plug gauge in Figure 4, or the diameter of the rigid spherical ball in S6.12.3(a), shall be 66 percent of the nominal inside diameter of the tubing as specified in Table VII.

S12.3 *High temperature conditioning and dimensional stability test.* (a) Condition the tubing at 230 degrees Fahrenheit (110 degrees Celsius) for 4 hours in an air oven.

(b) Remove the tubing from the oven and allow to cool at room temperature for 30 minutes.

(c) Measure the dimensions of the tubing using the procedure in S12.1.

S12.4 *Boiling water conditioning and dimensional stability test.* (a) Utilize a container constructed of a non-reactive material large enough so that the tubing to be tested does not touch any surface of the container. Fill container with distilled water.

(b) Slip the tubing over a stainless steel wire for positioning it in the pot.

(c) Bring the water to a boil. Place the tubing in the water and position it so that it does not touch the container. Boil the tubing for two hours. Replenish the water as necessary, adding it slowly so that the water in the pot boils continuously.

(d) Remove the tubing from the water and allow to cool at room temperature for 30 minutes. Wipe off any water that remains on the tubing.

(e) Measure the dimensions of the tubing using the procedure in S12.1.

S12.5 *Burst strength test.* (a) Utilize an air brake tubing assembly or prepare a 12 inch length of tubing and install end fittings according to the end fitting manufacturer's instructions.

(b) Plug one end of the assembly, fill it with water, and connect the other end to a source of water pressure. Bleed any air from the assembly and water pressure system.

(c) Increase the water pressure inside the tubing assembly at a rate of 3,000

psi per minute to the burst strength pressure for the size of tubing being tested as specified in Table VIII.

S12.6 *Moisture absorption and burst strength.* (a) Prepare a sample of tubing twelve inches in length.

(b) Condition the tubing at 230 degrees Fahrenheit (110 degrees Celsius) for 24 hours in an air oven. Remove the tubing from the oven and within 30 seconds, and weigh it to establish the initial weight. The weight shall be measured with a resolution of 0.01 gram; if the scale has a higher resolution, then values of 0.005 gram and above shall be rounded to the nearest 0.01 gram and values below 0.005 gram shall be truncated.

(c) Place the tubing in an environmental chamber and condition it for 100 hours at 100 percent relative humidity and a temperature of 75 degrees Fahrenheit (24 degrees Celsius).

(d) Remove the tubing from the chamber and within a period of 5 minutes, remove all surface moisture from the tubing using cloth and weigh the tubing to establish the conditioned weight. Weight shall be measured to the nearest 0.01 gram as in S12.6(b).

(e) Calculate percentage of moisture absorption as follows:

([Conditioned Weight—Initial Weight] ÷ [Initial Weight]) × 100

(f) Install end fittings according to the end fitting manufacturers instructions.

(g) Conduct the burst strength test in S12.5 except use 80 percent of the burst strength pressure for the size of tubing being tested as specified in Table VIII.

S12.7 *Ultraviolet light resistance test.* (a) *Apparatus.* An accelerated weathering test machine for ultraviolet light conditioning of plastic air brake tubing. The machine shall be equipped with fluorescent UVA–340 light bulbs and automatic irradiance control. Also utilize an impact test apparatus as shown in Figure 8.

(b) *Test standards.* The testing is in accordance with American Society for Testing and Materials (ASTM) G154–00 ''Standard Practice for Operating Fluorescent Light Apparatus for UV Exposure of Nonmetallic Materials;'' ASTM G151–97 ''Standard Practice for Exposing Nonmetallic Materials in Accelerated Test Devices that Use Laboratory Light Sources,'' and; ASTM D4329–99 ''Standard Practice for Fluorescent UV Exposure of Plastics.'' These incorporations by reference were approved by the Director of the Federal Register in accordance with 5 U.S.C. 552(a) and 1 CFR part 51. Copies may be obtained from the American Society for Testing and Materials (ASTM) International, 100 Barr Harbor Drive, P.O. Box C700, West Conshohocken, PA 19428–2959. Copies may be inspected at the National Highway Traffic Safety Administration, Technical Information Services, 400 Seventh St., SW., Plaza Level, Room 403, Washington, DC 20590, or at the National Archives and Records Administration (NARA). For information on the availability of this material at NARA, call (202) 741–6030, or go to: *http://www.archives.gov/federal_register/code_of_federal_regulations/ibr_locations.html.*

(c) *Preparation.* (1) Utilize a 12 inch length of plastic air brake tubing. Mask 1 inch of each end of the tubing where end fittings will be attached using opaque tape.

(2) Attach the tubing to the test rack of the machine, securing it at the ends along the masked sections. Wipe the outside surface of the tubing with acetone to remove any surface contaminants. Place the tubing and rack in the accelerated weathering test machine so that the center of the tubing assembly is approximately in the center of the UV light exposure area of the test machine. (If multiple plastic brake tubing assemblies are tested, then their position in the machine should be rotated according to ASTM D4329–99 S7.4.1, except the rotation shall be each 96 hours instead of weekly.) The distance from the light bulb to the tubing shall be approximately 2 inches. Set the UV irradiance to 0.85 watts per square meter at 340 nm and maintain this level during the testing. Maintain a temperature inside the test chamber of 113 degrees Fahrenheit (45 degrees Celsius), and use only atmospheric humidity. Expose the tubing at this UV irradiance level for 300 hours continuously. Remove the tubing from the test chamber.

(3) Place the tubing inside the impact test apparatus, and drop the impacter

onto the tubing from a height of 12 inches.

(4) Remove the masking material from the ends of the tubing. Install end fittings according to the end fitting manufacturer's instructions. Conduct the burst strength test in S12.5 except use 80 percent of the burst strength pressure for the size of tubing being tested as specified in Table VIII.

FIGURE 8. IMPACT TEST APPARATUS

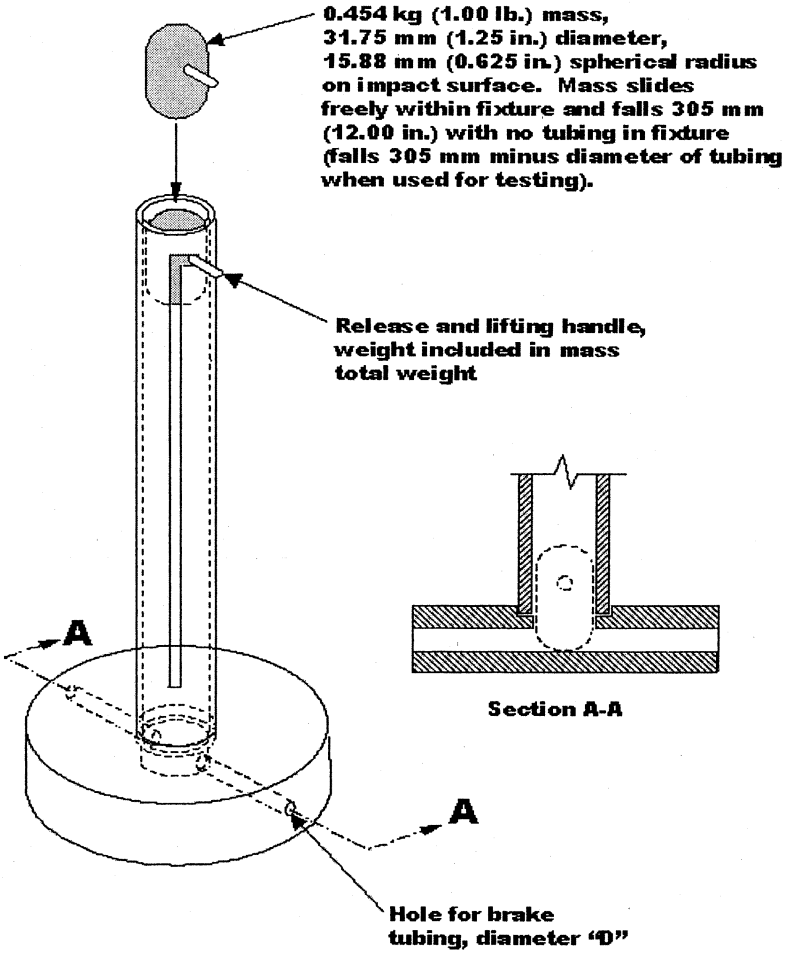

TABLE ACCOMPANYING FIGURE 8

Nominal tubing outside diameter	Hole diameter "D"	
	mm	Inches
1/8 inch	3.96	0.156
5/32 inch	4.75	0.187
3/16 inch	5.54	0.218
1/4 inch	7.14	0.281
5/16 inch	8.71	0.343
3/8 inch	10.31	0.406
1/2 inch	13.49	0.531
5/8 inch	16.66	0.656
3/4 inch	20.32	0.800
6 mm	6.80	0.268
8 mm	8.80	0.346
10 mm	10.80	0.425
12 mm	12.80	0.504
16 mm	16.80	0.661

S12.8 *Low temperature flexibility test.* (a) Utilize a cylinder having a radius of six times the nominal outside diameter of the tubing.

(b) Condition the tubing in an air oven at 230 degrees Fahrenheit (110 degrees Celsius) for 24 hours. Remove from the oven and cool at room temperature for 30 minutes.

(c) Condition the cylinder and the tubing in an environmental chamber at minus 40 degrees Fahrenheit (minus 40 degrees Celsius) for four hours.

(d) With the tubing and test cylinder at minus 40 degrees Fahrenheit (minus 40 degrees Celsius), bend the tubing 180 degrees around the cylinder at a steady rate in a period of 4 to 8 seconds.

S12.9 *High temperature flexibility test.* (a) Utilize a cylinder having a radius equal to the supported bend radius in Table VIII for the size of tubing being tested.

(b) Bend the tubing 180 degrees around the cylinder and hold in place with a clamp or other suitable support, applying only enough force on the tubing to hold it in position.

(c) Condition the tubing and cylinder in an air oven at 230 degrees Fahrenheit (110 degrees Celsius) for 72 hours. Remove the tubing and cylinder from the oven and cool at room temperature for two hours.

(d) Remove the clamps or supports from the tubing and straighten the tubing at a steady rate in a period of 4 to 8 seconds.

(e) Rebend the tubing 180 degrees around the cylinder, at the same point but in the opposite direction of the bending in S12.9(b), at a steady rate in a period of 4 to 8 seconds.

(f) Conduct the burst strength test in S12.5 except use 80 percent of the burst strength pressure for the size of tubing being tested as specified in Table VIII.

S12.10 *High temperature resistance test.* Condition the tubing in an air oven at 230 degrees Fahrenheit (110 degrees Celsius) for 72 hours. Remove the tubing and allow to cool at room temperature for 30 minutes. Conduct the burst strength test in S12.5 except use 80 percent of the burst strength pressure for the size of tubing being tested as specified in Table VIII.

S12.11 *High temperature conditioning, low temperature impact resistance test.* (a) *Apparatus.* Utilize an impact test apparatus as shown in Figure 8.

(b) Condition the tubing in an air oven at 230 degrees Fahrenheit (110 degrees Celsius) for 72 hours. Remove the tubing and allow to cool at room temperature for 30 minutes.

(c) Condition the tubing and the impact test apparatus in an environmental chamber at minus 40 degrees Fahrenheit (minus 40 degrees Celsius) for 4 hours.

(d) With the tubing and impact test apparatus at minus 40 degrees Fahrenheit (minus 40 degrees Celsius), place the tubing inside the apparatus and drop the impacter onto the tubing from a height of 12 inches. Remove the tubing from the chamber and allow to warm at room temperature for one hour.

(e) Conduct the burst strength test in S12.5 except use 80 percent of the burst strength pressure for the size of tubing being tested as specified in Table VIII.

S12.12 *Boiling water conditioning, low temperature impact resistance test.* (a) *Apparatus.* Utilize an impact test apparatus as shown in Figure 8.

(b) Condition the tubing in boiling water using the test in S12.4 (a) through (d), except that the length of tubing shall be 12 inches.

(c) Condition the tubing and the impact test apparatus in an environmental chamber at minus 40 degrees Fahrenheit (minus 40 degrees Celsius) for 4 hours.

(d) With the tubing and impact test apparatus at minus 40 degrees Fahrenheit (minus 40 degrees Celsius), place

the tubing inside the apparatus and drop the impacter onto the tubing from a height of 12 inches. Remove the tubing from the chamber and allow to warm at room temperature for one hour.

(e) Conduct the burst strength test in S12.5 except use 80 percent of the burst strength pressure for the size of tubing being tested as specified in Table VIII.

S12.13 *Zinc chloride resistance test.* (a) Utilize a cylinder having a radius equal to the supported bend radius in Table VIII for the size of tubing being tested. The cylinder is constructed of a non-reactive material or coated to prevent chemical reaction with zinc chloride. The length of the tubing sample is long enough so that its ends will not be submerged during the immersion in zinc chloride, or the ends of the tubing are plugged to keep the zinc chloride from entering the tubing.

(b) Bend the tubing 180 degrees around the cylinder and hold in place with a clamp or other suitable support constructed of non-reactive materials, applying only enough force on the tubing to hold it in position.

(c) Immerse the tubing and cylinder in a 50 percent zinc chloride aqueous solution at room temperature for 200 hours.

(d) Remove the tubing and cylinder from the solution. While still on the test cylinder, inspect the tubing under 7-power magnification for cracks.

S12.14 *Methyl alcohol resistance.* (a) Utilize a cylinder having a radius equal to the supported bend radius in Table VIII for the size of tubing being tested. The cylinder is constructed of a non-reactive material or coated to prevent chemical reaction with methyl alcohol.

(b) Bend the tubing 180 degrees around the cylinder and hold in place with a clamp or other suitable support constructed of non-reactive materials, applying only enough force on the tubing to hold it in position. The ends of the tubing may be shortened so that they will be fully submerged in the methyl alcohol.

(c) Immerse the tubing and cylinder in a 95 percent methyl alcohol aqueous solution at room temperature for 200 hours.

(d) Remove the tubing and cylinder from the solution. While still on the test cylinder, inspect the tubing under 7-power magnification for cracks.

S12.15 *High temperature conditioning and collapse resistance test.* (a) *Apparatus.* A holding device consisting of two vertical pins affixed to a flat, horizontal plate. Each pin projects 1 inch above the top surface of the plate. The diameter of each pin is approximately equal to the inside diameter of the tubing being tested. Using the unsupported bend radius for the size of tubing being tested from Table VIII, the distance between the pin centerlines is equal to:

[2 × unsupported bend radius] + [nominal OD of tubing]

(b) *Preparation.* (1) Use the unsupported bend radius for the size of tubing being tested from Table VIII and cut the tubing to the following length:

[3.14 × [unsupported bend radius]] + [10 × [nominal tubing OD]] + 2 inches

or

[3.14 × [unsupported bend radius]] + [10 × [nominal tubing OD]] + 50 mm

(2) Place a reference mark at the center of the sample. At this mark, measure the initial outside diameter of the tubing. If the tubing is slightly out-of-round, use the elliptical minor diameter as the initial outside diameter.

(3) Install the tubing completely over the pins of the holding device so that the tubing is bent 180 degrees. If the tubing has a natural curvature, the tubing shall be bent in the direction of the natural curvature.

(4) Condition the holding device and tubing in an air oven at 200 degrees Fahrenheit (93 degrees Celsius) for 24 hours. Remove the holding device and tubing and allow to cool at room temperature for thirty minutes.

(5) With the tubing still mounted to the holding device, measure the elliptical minor diameter of the tubing at the reference mark to determine the final outside diameter.

(c) *Calculation.* Calculate the percentage collapse of the outside diameter of the tubing as follows: ([Initial Outside Diameter—Final Outside Diameter] ÷ [Initial Outside Diameter]) × 100

S12.16 *Ozone resistance test.* Conduct the test specified in S6.8 using plastic air brake tubing.

S12.17 *Oil resistance test.* (a) Utilize a plastic air brake tubing assembly or prepare a 12 inch length of tubing and install end fittings according to the end fitting manufacturer's instructions.

(b) Immerse the tubing in ASTM IRM 903 oil at 212 degrees Fahrenheit (100 degrees Celsius) for 70 hours. Remove and allow to cool at room temperature for 30 minutes. Wipe any excess oil from the tubing assembly.

(c) Conduct the burst strength test in S12.5 except use 80 percent of the burst strength pressure for the size of tubing being tested as specified in Table VIII and, at the manufacturer's option, oil may be used as the test medium instead of water.

S12.18 *Tensile strength test.* Conduct the test in S8.9 using a plastic air brake tubing assembly or an assembly prepared from a 12 inch length of air brake tubing with end fittings installed according to the end fitting manufacturer's instructions.

S12.19 *Boiling water conditioning and tensile strength.* (a) *Apparatus.* Use a tension testing machine as specified in S8.9. The lower attachment point of the machine is equipped with a heated, open-top container that is water tight. The inside of the container (lower attachment point) and upper attachment point of the machine have provisions to quickly attach a brake hose assembly for tensile testing.

(b) *Preparation.* Prepare an air brake tubing assembly with a free length of 6 inches (six inches of exposed tubing between the end fittings), with the end fittings installed in accordance with the end fitting manufacturer's instructions. If necessary install adapters on the end fittings to permit quick attachment to the machine, to keep water from entering the tubing assembly, and to ensure that the tubing assembly is in a straight position when installed on the machine. Fill the container with distilled water such that the lower 4 inches of exposed tubing will be submerged when the brake tubing assembly is installed on the machine. Heat the water until it boils. Then quickly install the plastic air brake tubing assembly on the machine with the lower end of the tubing assembly in the boiling water. After the water has boiled continuously for 5 minutes, apply tension to the tubing assembly at a rate of 1 inch per minute travel of the moving head until either the conditioned tensile load in Table VIII for the size of tubing being tested is reached or the free length of the tubing assembly reaches 9 inches, whichever occurs first.

S12.20 *Thermal conditioning and tensile strength.* (a) *Apparatus.* Use a tension testing machine as specified in S8.9.

(b) *Preparation.* Prepare an air brake tubing assembly with a free length of 6 inches (six inches of exposed tubing between the end fittings), with the end fittings installed in accordance with the end fitting manufacturer's instructions. If necessary install adapters on the end fittings to permit attachment to the machine, to keep water from entering the tubing assembly, and/or to ensure that the tubing assembly is in a straight position when installed on the machine. Subject the tubing assembly to four complete cycles of the following sequence:

(1) Condition the tubing assembly in an environmental chamber at minus 40 degrees Fahrenheit (minus 40 degrees Celsius) for 30 minutes. Remove from the chamber and allow to warm at room temperature for 30 minutes.

(2) Condition the tubing assembly by submerging it in boiling water for 15 minutes. Remove and allow to cool at room temperature for 30 minutes. Install the tubing assembly on the tension testing machine and apply tension to the tubing assembly at a rate of one inch per minute travel of the moving head until either the conditioned tensile load in Table VIII for the size of tubing being tested is reached or the free length of the tubing assembly reaches 9 inches, whichever occurs first.

S12.21 *Vibration resistance test.* (a) *Apparatus.* A vibration testing machine that supports a brake tubing assembly by its end fittings in approximately a straight line and includes the following features:

(1) One tubing assembly attachment point is fixed and the other moves in a plane perpendicular to a line projected between the attachment points. The movable attachment point moves in a

linear direction and travels ½ inch total and at its midpoint of travel falls on a line projected between the attachment points. The movable attachment point has a cycle rate of 600 cycles per minute.

(2) The distance between the attachment points is adjustable to compensate for varying lengths of brake tubing assemblies.

(3) The actuating mechanism for the movable attachment point is balanced to prevent introduction of machine vibration into the brake tubing assembly.

(4) The machine has a compressed air supply system that pressurizes the air brake tubing assembly through one fitting while the other fitting is plugged. The machine's compressed air supply system includes a pressure gauge or monitoring system and an air flow meter.

(5) The machine is constructed so that an air brake tubing assembly mounted on it can be conditioned in an environmental test chamber.

(b) *Preparation*. (1) Prepare an air brake tubing assembly with a free length of 18 inches (18 inches of exposed tubing between the end fittings), with the end fittings installed in accordance with the end fitting manufacturer's instructions. Record the initial tightening torque for an end fitting that uses a threaded retaining nut.

(2) Install the air brake tubing assembly on the vibration testing machine and, with the movable attachment point at the midpoint of its travel, adjust the distance between the attachment points so that they are ½ inch closer together than the distance at which the tubing assembly is taut.

(3) With the tubing assembly inside the environmental chamber, apply compressed air to the tubing assembly at a regulated pressure of 120 psi and maintain the supply of air to the tubing assembly for the duration of the test. Set the temperature of the environmental chamber to 220 degrees Fahrenheit (104 degrees Celsius) and initiate cycling of the movable attachment point. After 250,000 cycles, set the temperature of the environmental chamber to minus 40 degrees Fahrenheit (minus 40 degrees Celsius). After 500,000 cycles, set the temperature of the environmental chamber to 220 degrees Fahrenheit (104 degrees Celsius). After 750,000 cycles, set the temperature of the environmental chamber to minus 40 degrees Fahrenheit (minus 40 degrees Celsius). Measure the air flow rate just prior to 1,000,000 cycles and if the compressed air flow rate supplied to the air brake tubing assembly exceeds 50 cubic centimeters per minute this constitutes failure of the test. Stop the cycling at 1,000,000 cycles and set the environmental chamber temperature to 75 degrees Fahrenheit (24 degrees Celsius), while air pressure is still supplied to the air brake tubing assembly. After one hour, measure the compressed air flow rate supplied to the air brake tubing assembly and if the rate exceeds 25 cubic centimeters per minute this constitutes failure of the test.

(4) For end fittings that use a threaded retaining nut, apply 20 percent of the original tightening torque as recorded in S12.21(b)(1). If the retention nut visibly moves, this constitutes a failure of the test.

S12.22 *End fitting retention test*. (a) Utilize an air brake tubing assembly or prepare a 12 inch length of tubing and install end fittings according to the end fitting manufacturer's instructions.

(b) Plug one end of the assembly, fill it with water, and connect the other end to a source of water pressure. Bleed any air from the assembly and water pressure system.

(c) Increase the pressure inside the tubing assembly at a rate of 3,000 psi per minute to 50 percent of the burst strength pressure for the size of tubing being tested as specified in Table VIII. Hold the pressure constant for 30 seconds.

(d) Increase the pressure inside the tubing assembly at a rate of 3,000 psi per minute to the burst strength pressure for the size of tubing being tested as specified in Table VIII.

S12.23 *Thermal conditioning and end fitting retention test*. (a) *Apparatus*. A source of hydraulic pressure that includes a pressure gauge or monitoring system, uses ASTM IRM 903 oil, and is constructed so that an air brake tubing

assembly mounted to it can be conditioned in an environmental test chamber.

(b) *Preparation*. Utilize an air brake tubing assembly or prepare a 12 inch length of tubing and install end fittings according to the end fitting manufacturer's instructions. Attach one end of the assembly to the hydraulic pressure supply and plug the other end of the assembly, fill the assembly with ASTM IRM 903 oil and bleed any air from the assembly, and place the tubing assembly inside an environmental chamber. Conduct the following tests:

(1) With atmospheric pressure applied to the oil inside the tubing assembly, set the environmental chamber temperature to 200 degrees Fahrenheit (93 degrees Celsius) and condition the tubing assembly for 24 hours.

(2) With the temperature maintained at 200 degrees Fahrenheit (93 degrees Celsius), increase the oil pressure inside the tubing assembly at a rate of 3,000 psi per minute to 450 psi, and hold this pressure for 5 minutes.

(3) Decrease the oil pressure inside the tubing assembly at a rate of 3,000 psi per minute to atmospheric pressure and set the temperature of the environmental chamber to 75 degrees Fahrenheit (24 degrees Celsius). Condition the tubing assembly at this temperature for 1 hour.

(4) Set the temperature of the environmental chamber to minus 40 degrees Fahrenheit (minus 40 degrees Celsius) and condition the tubing assembly for 24 hours.

(5) With the temperature maintained at minus 40 degrees Fahrenheit (minus 40 degrees Celsius), increase the hydraulic pressure inside the tubing assembly at a rate of 3,000 psi per minute to 450 psi, and hold this pressure for 5 minutes.

S12.24 *End fitting serviceability*. (a) *Apparatus*. A source of air pressure that includes a pressure gauge or monitoring system and is equipped with a mass air flow meter.

(b) *Preparation*. Prepare a 12-inch length of tubing and plug one end. Assemble the end fitting with the threaded retention nut on the other end of the tubing according to the end fitting manufacturer's instructions, then disassemble the fitting. Repeat the assembly and disassembly sequence three more times, and then reassemble the end fitting (five total assembly steps).

(c) Attach the end fitting with the threaded retention nut to the source of air pressure. Pressurize the tubing at a rate of 3,000 psi per minute to a pressure of 120 psi. If the end fitting leaks, measure and record the leakage rate using the mass air flow meter.

S12.25 *End fitting corrosion resistance*. Utilize an air brake tubing assembly or prepare a 12-inch length of tubing and install end fittings according to the end fitting manufacturer's instructions. Conduct the test specified in S6.11 using a plastic air brake tubing assembly.

S13. *Test Conditions*. Each hose assembly or appropriate part thereof shall be able to meet the requirements of S5, S7, S9, and S11, under the following conditions.

S13.1 The temperature of the testing room is 75 degrees Fahrenheit (24 degrees Celsius).

S13.2 The brake hoses and brake hose assemblies are at least 24 hours old, and unused.

S13.3 Specified test pressures are gauge pressures (psig).

[38 FR 31303, Nov. 13, 1973]

EDITORIAL NOTE: For FEDERAL REGISTER citations affecting § 571.106, see the List of CFR Sections Affected, which appears in the Finding Aids section of the printed volume and on GPO Access.

§ 571.107 [Reserved]

§ 571.108 Standard No. 108; Lamps, reflective devices, and associated equipment.

S1. *Scope*. This standard specifies requirements for original and replacement lamps, reflective devices, and associated equipment.

S2. *Purpose*. The purpose of this standard is to reduce traffic accidents and deaths and injuries resulting from traffic accidents, by providing adequate illumination of the roadway, and by enhancing the conspicuity of motor vehicles on the public roads so that their presence is perceived and their signals understood, both in daylight and in darkness or other conditions of reduced visibility.

EFFECTIVE DATE NOTE: At 72 FR 68266, Dec. 4, 2000, § 571.108 was revised, effective Sept 1, 2008. At 73 FR 50730, Aug. 28, 2008, the revision was delayed until Dec. 1, 2009. For the convenience of the user, the revised text is set forth as follows:

§ 571.108 Standard No. 108; Lamps, reflective devices, and associated equipment.

S1 *Scope*. This standard specifies requirements for original and replacement lamps, reflective devices, and associated equipment.

S2 *Purpose*. The purpose of this standard is to reduce traffic accidents and deaths and injuries resulting from traffic accidents, by providing adequate illumination of the roadway, and by enhancing the conspicuity of motor vehicles on the public roads so that their presence is perceived and their signals understood, both in daylight and in darkness or other conditions of reduced visibility.

S3 *Application*. This standard applies to:

S3.1 Passenger cars, multipurpose passenger vehicles, trucks, buses, trailers (except pole trailers and trailer converter dollies), and motorcycles;

S3.2 Retroreflective sheeting and reflex reflectors manufactured to conform to S8.2 of this standard; and

S3.3 Lamps, reflective devices, and associated equipment for replacement of like equipment on vehicles to which this standard applies.

S4 *Definitions*.

Aiming plane means a plane defined by the surface of the three aiming pads on the lens.

Aiming reference plane means a plane which is perpendicular to the longitudinal axis of the vehicle and tangent to the forwardmost aiming pad on the headlamp.

Aiming screws are the horizontal and vertical adjusting screws with self-locking features used to aim and retain a headlamp unit in the proper position.

Axis of reference means the characteristic axis of the lamp for use as the direction of reference (H = 0°, V = 0°) for angles of field for photometric measurements and for installing the lamp on the vehicle.

Backup lamp means a lamp or lamps which illuminate the road to the rear of a vehicle and provide a warning signal to pedestrians and other drivers when the vehicle is backing up or is about to back up.

Beam contributor means an indivisible optical assembly including a lens, reflector, and light source, that is part of an integral beam headlighting system and contributes only a portion of a headlamp beam.

Cargo lamp is a lamp that is mounted on a multipurpose passenger vehicle, truck, or bus for the purpose of providing illumination to load or unload cargo.

Clearance lamps are lamps which show to the front or rear of the vehicle, mounted on the permanent structure of the vehicle as near as practicable to the upper left and right extreme edges to indicate the overall width and height of the vehicle.

Coated materials means a material which has a coating applied to the surface of the finished sample to impart some protective properties. Coating identification means a mark of the manufacturer's name, formulation designation number, and recommendations for application.

Color Fundamental definitions of color are expressed by Chromaticity Coordinates according to the International Commission on Illumination (C.I.E.) 1931 Standard Colorimetric System, as described in the CIE 1931 Chromaticity Diagram (incorporated by reference, see 571.108 S5.2 of this title).

Color bleeding means the migration of color out of a plastic part onto the surrounding surface.

Combination clearance and side marker lamps are single lamps which simultaneously fulfill the requirements of clearance and side marker lamps.

Cracking means a separation of adjacent sections of a plastic material with penetration into the specimen.

Crazing means a network of apparent fine cracks on or beneath the surface of materials.

Cutoff means a generally horizontal, visual/optical aiming cue in the lower beam that marks a separation between areas of higher and lower luminance.

Daytime running lamps (DRLs) are steady burning lamps that are used to improve the conspicuity of a vehicle from the front and front sides when the regular headlamps are not required for driving.

Delamination means a separation of the layers of a material including coatings.

Design voltage means the voltage used for design purposes.

Direct reading indicator means a device that is mounted in its entirety on a headlamp or headlamp aiming or headlamp mounting equipment, is part of a VHAD, and provides information about headlamp aim in an analog or digital format.

Effective light-emitting surface means that portion of a lamp that directs light to the photometric test pattern, and does not include transparent lenses, mounting hole bosses, reflex reflector area, beads or rims that may glow or produce small areas of increased intensity as a result of uncontrolled light from an area of ½° radius around a test point.

Effective projected luminous lens area means the area of the orthogonal projection of the effective light-emitting surface of a lamp on a plane perpendicular to a defined direction relative to the axis of reference. Unless otherwise specified, the direction is coincident with the axis of reference.

Exposed means material used in lenses or optical devices exposed to direct sunlight as installed on the vehicle.

Filament means that part of the light source or light emitting element(s), such as a resistive element, the excited portion of a specific mixture of gases under pressure, or any part of other energy conversion sources, that generates radiant energy which can be seen.

Flash means a cycle of activation and deactivation of a lamp by automatic means continuing until stopped either automatically or manually.

Fully opened means the position of the headlamp concealment device in which the headlamp is in the design open operating position.

H-V axis means the line from the center of the principal filament of a lamp to the intersection of the horizontal (H) and vertical (V) lines of a photometric test screen.

Haze means the cloudy or turbid appearance of an otherwise transparent specimen caused by light scattered from within the specimen or from its surface.

Headlamp means a lighting device providing an upper and/or a lower beam used for providing illumination forward of the vehicle.

Headlamp concealment device means a device, with its operating system and components, that provides concealment of the headlamp when it is not in use, including a movable headlamp cover and a headlamp that displaces for concealment purposes.

Headlamp mechanical axis means the line formed by the intersection of a horizontal and a vertical plane through the light source parallel to the longitudinal axis of the vehicle. If the mechanical axis of the headlamp is not at the geometric center of the lens, then the location will be indicated by the manufacturer on the headlamp.

Headlamp test fixture means a device designed to support a headlamp or headlamp assembly in the test position specified in the laboratory tests and whose mounting hardware and components are those necessary to operate the headlamp as installed in a motor vehicle.

High-mounted stop lamp means a lamp mounted high and possibly forward of the tail, stop, and rear turn signal lamps intended to give a steady stop warning through intervening vehicles to operators of following vehicles.

Identification lamps are lamps used in groups of three, in a horizontal row, which show to the front or rear or both, having lamp centers spaced not less than [6 in] 15.2 mm nor more than [12 in] 30.4 mm apart, mounted on the permanent structure as near as practicable to the vertical centerline and the top of the vehicle to identify certain types of vehicles.

Integral beam headlamp means a headlamp (other than a standardized sealed beam headlamp designed to conform to paragraph S10.13 or a replaceable bulb headlamp designed to conform to paragraph S10.15) comprising an integral and indivisible optical assembly including lens, reflector, and light source, except that a headlamp conforming to paragraph S10.18.8 or paragraph S10.18.9 may have a lens designed to be replaceable.

License plate lamp means a lamp used to illuminate the license plate on the rear of a vehicle.

Lower beam means a beam intended to illuminate the road and its environs ahead of the vehicle when meeting or closely following another vehicle.

Material means the type and grade of plastics, composition, and manufacturer's designation number and color.

Mechanically aimable headlamp means a headlamp having three pads on the lens, forming an aiming plane used for laboratory photometric testing and for adjusting and inspecting the aim of the headlamp when installed on the vehicle.

Motor driven cycle means every motorcycle, including every motor scooter, with a motor which produces not more than 5 horsepower, and every bicycle with motor attached.

Motorcycle or motor driven cycle headlamp means a major lighting device used to produce general illumination ahead of the vehicle.

Mounting ring means the adjustable ring upon which a sealed beam unit is mounted.

Mounting ring (type F sealed beam) means the adjustable ring upon which a sealed beam unit is mounted and which forces the sealed beam unit to seat against the aiming ring when assembled into a sealed beam assembly.

Multiple compartment lamp means a device which gives its indication by two or more separately lighted areas which are joined by one or more common parts, such as a housing or lens.

Multiple lamp arrangement means an array of two or more separate lamps on each side of the vehicle which operate together to give a signal.

Optically combined means a lamp having a single or two filament light source or two or more separate light sources that operate in different ways, and has its optically functional lens area wholly or partially common to two or more lamp functions.

Overall width means the nominal design dimension of the widest part of the vehicle, exclusive of signal lamps, marker lamps, outside rearview mirrors, flexible fender extensions, mud flaps, and outside door handles determined with doors and windows closed, and the wheels in the straight-ahead position. Running boards may also be excluded from the determination of overall width if they do not extend beyond the width as determined by the other items excluded by this definition.

Parking lamps are lamps on both the left and right of the vehicle which show to the

front and are intended to mark the vehicle when parked or serve as a reserve front position indicating system in the event of headlamp failure.

Protected means material used in inner lenses for optical devices where such lenses are protected from exposure to the sun by an outer lens made of materials meeting the requirements for exposed plastics.

Rated voltage means the nominal circuit or vehicle electrical system voltage classification.

Reflex reflectors are devices used on vehicles to give an indication to approaching drivers using reflected light from the lamps of the approaching vehicle.

Remote reading indicator means a device that is not mounted in its entirety on a headlamp or headlamp aiming or headlamp mounting equipment, but otherwise meets the definition of a direct reading indicator.

Replaceable bulb headlamp means a headlamp comprising a bonded lens and reflector assembly and one or two replaceable light sources, except that a headlamp conforming to paragraph S10.18.8 or paragraph S10.18.9 may have a lens designed to be replaceable.

Replaceable light source means an assembly of a capsule, base, and terminals that is designed to conform to the requirements of appendix A or appendix B of 49 CFR part 564 *Replaceable Light Source Information* of this Chapter.

Retaining ring means the clamping ring that holds a sealed beam unit against a mounting ring.

Retaining ring (type F sealed beam) means the clamping ring that holds a sealed beam unit against a mounting ring, and that provides an interface between the unit's aiming/seating pads and the headlamp aimer adapter (locating plate).

School bus signal lamps are alternately flashing lamps mounted horizontally both front and rear, intended to identify a vehicle as a school bus and to inform other users of the highway that such vehicle is stopped on the highway to take on or discharge school children.

Sealed beam headlamp means an integral and indivisible optical assembly including the light source with ''SEALED BEAM'' molded in the lens.

Sealed beam headlamp assembly means a major lighting assembly which includes one or more sealed beam units used to provide general illumination ahead of the vehicle.

Seasoning means the process of energizing the filament of a headlamp at design voltage for a period of time equal to 1% of design life, or other equivalent method.

Semiautomatic headlamp beam switching device is one which provides either automatic or manual control of beam switching at the option of the driver. When the control is automatic the headlamps switch from the upper beam to the lower beam when illuminated by the headlamps on an approaching vehicle and switch back to the upper beam when the road ahead is dark. When the control is manual, the driver may obtain either beam manually regardless of the conditions ahead of the vehicle.

Side marker lamps are lamps which show to the side of the vehicle, mounted on the permanent structure of the vehicle as near as practicable to the front and rear edges to indicate the overall length of the vehicle. Additional lamps may also be mounted at intermediate locations on the sides of the vehicle.

Stop lamps are lamps giving a steady light to the rear of a vehicle to indicate a vehicle is stopping or diminishing speed by braking.

Taillamps are steady burning low intensity lamps used to designate the rear of a vehicle.

Test voltage means the specified voltage and tolerance to be used when conducting a test.

Turn signal lamps are the signaling element of a turn signal system which indicates the intention to turn or change direction by giving a flashing light on the side toward which the turn will be made.

Turn signal flasher means a device which causes a turn signal lamp to flash as long as it is turned on.

Turn signal operating unit means an operating unit that is part of a turn signal system by which the operator of a vehicle causes the signal units to function.

Upper beam means a beam intended primarily for distance illumination and for use when not meeting or closely following other vehicles.

Vehicle headlamp aiming device or VHAD means motor vehicle equipment, installed either on a vehicle or headlamp, which is used for determining the horizontal or vertical aim, or both the vertical and horizontal aim of the headlamp.

Vehicular hazard warning signal flasher means a device which, as long as it is turned on, causes all the required turn signal lamps to flash.

Vehicular hazard warning signal operating unit means a driver controlled device which causes all required turn signal lamps to flash simultaneously to indicate to approaching drivers the presence of a vehicular hazard.

Visually/optically aimable headlamp means a headlamp which is designed to be visually/optically aimable in accordance with the requirements of paragraph S10.18.9 of this standard.

S5 *References to SAE publications.*

S5.1 Each required lamp, reflective device, and item of associated equipment must be designed to conform to the requirements of applicable SAE publications as referenced and subreferenced in this standard. The words ''it is recommended that,'' ''recommendations,'' or ''should be'' appearing in

any SAE publication referenced or subreferenced in this standard must be read as setting forth mandatory requirements.

S5.2 *Incorporation by reference.* The Director of the Federal Register approves the incorporation by reference of the following material in accordance with 5 U.S.C. 552(a) and 1 CFR Part 51. All material is available for inspection at the NHTSA Reading Room, 1200 New Jersey Avenue, SE., Washington, DC 20590, or at NARA. For information on the availability of this material at NARA, call 202–741–6030, or go to: *http://www.archives.gov/federal_register/code_of_federal_regulations/ibr_locations.html.*

The material is also available at the publisher whose name and address follow the standard number:

1. Society of Automotive Engineers (SAE) Standard J602, revised AUG 1963, ''Headlamp Aiming Device for Mechanically Aimable Sealed Beam Headlamp Units.'' Society of Automotive Engineers, Inc., 400 Commonwealth Drive, Warrendale, PA 15096.

2. Society of Automotive Engineers (SAE) Standard J941b, revised FEB 1969, ''Motor Vehicle Driver's Eye Range.'' Society of Automotive Engineers, Inc., 400 Commonwealth Drive, Warrendale, PA 15096.

3. Society of Automotive Engineers (SAE) Standard J602, revised OCT 1980, ''Headlamp Aiming Device for Mechanically Aimable Sealed Beam Headlamp Units.'' Society of Automotive Engineers, Inc., 400 Commonwealth Drive, Warrendale, PA 15096.

4. Society of Automotive Engineers (SAE) Standard J2009, revised FEB 1993, ''Forward Discharge Lighting Systems.'' Society of Automotive Engineers, Inc., 400 Commonwealth Drive, Warrendale, PA 15096.

5. Society of Automotive Engineers (SAE) Standard J573d, revised DEC 1968, ''Lamp Bulbs and Sealed Units.'' Society of Automotive Engineers, Inc., 400 Commonwealth Drive, Warrendale, PA 15096.

6. Society of Automotive Engineers (SAE) Standard J567b, revised APR 1964, ''Bulb Sockets.'' Society of Automotive Engineers, Inc., 400 Commonwealth Drive, Warrendale, PA 15096.

7. International Commission on Illumination (C.I.E.) 1931 Chromaticity Diagram. CIE Central Bureau, Kegelgasse 27, A–1030 Vienna, Austria.

8. General Services Administration (GSA) Federal Specification L–S–300, approved September 1965, ''Sheeting and Tape, Reflective: Nonexposed Lens, Adhesive Backing.'' Superintendent of Documents, U.S. Government Printing Office, Washington, DC 20402, telephone 202–512–1800.

9. American Society for Testing and Materials (ASTM) D4956–90, published December 1990, ''Standard Specification for Retroreflective Sheeting for Traffic Control.'' ASTM International, 100 Barr Harbor Drive, PO Box C700, Conshohocken, PA 19428–2959.

10. ECE 48 E/ECE/324–E/ECE/TRANS/505, Rev.1/ADD.47/Rev.1/Corr.2, 26 February 1996, ''Uniform Provisions Concerning the Approval of Vehicles with Regard to the Installation of Lighting and Light-Signaling Devices.'' United Nations, Conference Services Division, Distribution and Sales Section, Office C.115–1, Palais des Nations, CH–1211, Geneva 10, *http://www.unece.org/trans/main/wp29/wp29regs.html.*

11. American Society for Testing and Materials (ASTM) D1003–92, published December 1992, ''Standard Test Method for Haze and Luminous Transmittance of Transparent Plastics.'' ASTM International, 100 Barr Harbor Drive, PO Box C700, Conshohocken, PA 19428–2959.

12. American Society for Testing and Materials (ASTM) E308–66, reapproved 1981, ''Standard Practice for Spectrophotometry and Description of Color in CIE 1931 System.'' ASTM International, 100 Barr Harbor Drive, PO Box C700, Conshohocken, PA 19428–2959.

13. American Society for Testing and Materials (ASTM) B117–73, reapproved 1979, ''Standard Method of Salt Spray (Fog) Testing.'' ASTM International, 100 Barr Harbor Drive, PO Box C700, Conshohocken, PA 19428–2959.

14. American Society for Testing and Materials (ASTM) Co. 05.04 1985, ''Annual Book of ASTM Standards: Test Methods for Rating Motor, Diesel, Aviation Fuels,'' Section I, parts A2.3.2, A2.3.3, and A2.7 in Annex 2. ASTM International, 100 Barr Harbor Drive, PO Box C700, Conshohocken, PA 19428–2959.

15. American Society for Testing and Materials (ASTM) D362–84, published March 1984, ''Standard Specification for Industrial Grade Toluene.'' ASTM International, 100 Barr Harbor Drive, PO Box C700, Conshohocken, PA 19428–2959.

16. American Society for Testing and Materials (ASTM) C150–77, published April 1977, ''Standard Specification for Portland Cement.'' ASTM International, 100 Barr Harbor Drive, PO Box C700, Conshohocken, PA 19428–2959.

17. Illuminating Engineering Society of North America (IES) LM 45, approved April 1980, ''IES Approved Method for Electrical and Photometric Measurements of General Service Incandescent Filament Lamps.'' Illuminating Engineering Society of North America, 345 East 47th St., New York, NY 10017.

S6 *Vehicle requirements.*

S6.1 *Required lamps, reflective devices, and associated equipment by vehicle type.*

S6.1.1 *Quantity.* Except as provided in succeeding paragraphs of this S6.1.1 each vehicle must be equipped with at least the number of lamps, reflective devices, and items of associated equipment specified for that vehicle

type and size in Table I and Section 6.6, designed to conform to the requirements of this standard. Multiple license plate lamps and backup lamps may be used to fulfill photometric requirements for those functions.

S6.1.1.1 *Conspicuity systems.* Each trailer of 2032 mm or more in overall width, and with a GVWR over 10,000 lbs., except a trailer designed exclusively for living or office use, and each truck tractor must be equipped with retroreflective sheeting, reflex reflectors, or a combination of retroreflective sheeting and reflex reflectors as specified in S8.2.

S6.1.1.2 *High-mounted stop lamps.* Each multipurpose passenger vehicle, truck, and bus required by this standard to be equipped with a high-mounted stop lamp, whose vertical centerline, when the vehicle is viewed from the rear, is not located on a fixed body panel but separates one or two moveable body sections, such as doors, which lacks sufficient space to install a single high-mounted stop lamp on the centerline above such body sections, must have two high-mounted stop lamps identical in size and shape.

S6.1.1.2.1 The two lamps must be located at the same height, with one vertical edge of each lamp on the vertical edge of the body section nearest the vehicle centerline.

S6.1.1.3 *Truck tractor rear turn signal lamps.* A truck tractor need not be equipped with turn signal lamps mounted on the rear if the turn signal lamps installed at or near the front are of double face construction and are located such that they meet the photometric requirements for double faced turn signal lamps specified in Footnote 6 of Table VII.

S6.1.1.3.1 The flashing signal from a double faced signal lamp must not be obliterated when subjected to external light rays from either in front or behind, at any and all angles.

S6.1.1.4 *Daytime running lamps.* A passenger car, multipurpose passenger vehicle, truck, or bus may be equipped with a pair of daytime running lamps (DRLs) as specified in Table I and S7.10 of this standard. DRLs may be any pair of lamps on the front of the vehicle, whether or not required by this standard, other than parking lamps or fog lamps.

S6.1.2 *Color.* The color in all lamps and reflective devices to which this standard applies must be as specified in Table I. The color identified as amber is identical to the color identified as yellow.

S6.1.3 *Mounting location.*

S6.1.3.1 Each lamp, reflective device, and item of associated equipment must be securely mounted on a rigid part of the vehicle, other than glazing, that is not designed to be removed except for repair, within the mounting location and height limits as specified in Table I, and in a location where it complies with all applicable photometric requirements, effective projected luminous lens area requirements, and visibility requirements with all obstructions considered.

S6.1.3.2 When multiple lamp arrangements or multiple compartment rear turn signal lamps, stop lamps, or taillamps are used, with only a portion of the compartments or lamps installed on a rigid part of the vehicle, that portion must meet at least the photometric requirements for the applicable single compartment lamp.

S6.1.3.3 *License plate lamp.* The license plate lamp or lamps installed on vehicles other than motorcycles and motor driven cycles must be mounted so as to illuminate the license plate without obstruction from any designed feature unless the lamp or lamps is (are) designed to comply with all the photometric requirements with these obstructions considered.

S6.1.3.4 *High-mounted stop lamps.*

S6.1.3.4.1 *Interior mounting.* A high-mounted stop lamp mounted inside the vehicle must have means provided to minimize reflections from the light of the lamp upon the rear window glazing that might be visible to the driver when viewed directly, or indirectly in the rearview mirror.

S6.1.3.4.2 *Accessibility.* Each high-mounted stop lamp must provide access for convenient replacement of bulbs without special tools.

S6.1.3.5 *Headlamp beam mounting.*

S6.1.3.5.1 *Vertical headlamp arrangement.*

S6.1.3.5.1.1 Where multiple headlamps with single light sources are installed in a vertical orientation the lower beam must be provided by the uppermost headlamp.

S6.1.3.5.1.2 Where headlamps with two vertically oriented light sources are installed the lower beam must be provided by the uppermost light source or by all light sources.

S6.1.3.5.1.3 Where more than one lamp must be used for a motorcycle headlighting system, the lamps must be mounted vertically, with the lower beam as high as practicable.

S6.1.3.5.2 *Horizontal headlamp arrangement.*

S6.1.3.5.2.1 Where multiple headlamps with single light sources are installed in a horizontal orientation the lower beam must be provided by the most outboard headlamp.

S6.1.3.5.2.2 Where headlamps with two horizontally oriented light sources are installed the lower beam must be provided by the outboard light source or by all light sources.

S6.1.3.6 *Auxiliary lamps mounted near identification lamps.* Each auxiliary lamp must be located at least twice the distance from any required identification lamp as the distance between two adjacent required identification lamps.

S6.1.4 *Mounting height.* The mounting height of each lamp and reflective device

must be measured from the center of the item, as mounted on the vehicle at curb weight, to the road surface.

S6.1.4.1 *High-mounted stop lamps.*

S6.1.4.1.1 A high-mounted stop lamp mounted below the rear window must have no lens portion lower than 153 mm [6 in] below the lower edge of the rear glazing on convertibles, or 77 mm [3 in] on other passenger cars.

S6.1.5 *Activation.* Each lamp must be activated as specified, in the combinations specified, and in response to the inputs specified in Table I and Table II.

S6.1.5.1 *Hazard warning signal.* In all passenger cars, multipurpose passenger vehicles, trucks, and buses, the activation of the vehicular hazard warning signal operating unit must cause to flash simultaneously sufficient turn signal lamps to meet, as a minimum, the turn signal photometric requirements of this standard.

S6.1.5.2 *Simultaneous beam activation.*

S6.1.5.2.1 On any vehicle to which this standard applies where the headlighting system is designed to conform to the photometric requirements of UB1 of Table XVIII and LB1M or LB1V of Table XIX–a, the lamps marked ''L'' or ''LF''' may remain permanently activated when the lamps marked ''U'' or ''UF''' are activated.

S6.1.5.2.2 On any vehicle to which this standard applies where an integral beam headlighting system is designed to conform to the photometric requirements of UB6 of Table XVIII and LB5M of Table XIX–b or LB4V of Table XIX–c, the lower beam headlamps must remain permanently activated when the upper beam headlamps are activated.

S6.1.5.2.3 On any vehicle to which this section applies where the headlighting system is designed to conform to the photometric requirements of UB2 of Table XVIII and LB2M or LB2V of Table XIX–a, a lower beam light source may remain permanently activated when an upper beam light source is activated if the lower beam light source contributes to the upper beam photometric compliance of the headlighting system.

S6.2 *Impairment.*

S6.2.1 No additional lamp, reflective device, or other motor vehicle equipment is permitted to be installed that impairs the effectiveness of lighting equipment required by this standard.

S6.2.2 If any required lamp or reflective device is obstructed by motor vehicle equipment (e.g., mirrors, snow plows, wrecker booms, backhoes, winches, etc.) including dealer installed equipment, and cannot meet the applicable photometry and visibility requirements, the vehicle must be equipped with an additional lamp or device of the same type which meet all applicable requirements of this standard, including photometry and visibility.

S6.2.3 *Headlamp obstructions.*

S6.2.3.1 When activated in a steady burning state, headlamps must not have any styling ornament or other feature, such as a translucent cover or grill, in front of the lens.

S6.2.3.2 Headlamp wipers may be used in front of the lens provided that the headlamp system is designed to conform with all applicable photometric requirements with the wiper stopped in any position in front of the lens.

S6.3 *Equipment combinations.* Two or more lamps, reflective devices, or items of associated equipment may be combined if the requirements for each lamp, reflective device, and item of associated equipment are met with the following exceptions:

S6.3.1 No high-mounted stop lamp is permitted to be combined with any other lamp or reflective device, other than with a cargo lamp.

S6.3.2 No high-mounted stop lamp is permitted to be optically combined with any cargo lamp.

S6.3.3 No clearance lamp is permitted to be optically combined with any taillamp.

S6.4 *Lens area, visibility and school bus signal lamp aiming.*

S6.4.1 *Effective projected luminous lens area.* Each turn signal lamp, stop lamp, high-mounted stop lamp, and school bus signal lamp must meet the applicable effective projected luminous lens area requirement specified in Tables IV–a, IV–b, and IV–c.

S6.4.2 *Visibility.* Each backup lamp, single or combination of dual high-mounted stop lamp(s), and school bus signal lamp must meet the applicable visibility requirement specified in Table V-a.

S6.4.3 *Visibility options.* A manufacturer must certify compliance of each lamp function to one of the following visibility requirement options, and it may not thereafter choose a different option for that vehicle:

(a) *Lens area option.* When a vehicle is equipped with any lamp listed in Table V-b each such lamp must provide not less than 1250 sq mm of unobstructed effective projected luminous lens area in any direction throughout the pattern defined by the corner points specified in Table V-b for each such lamp; or

(b) *Luminous intensity option.* When a vehicle is equipped with any lamp listed in Table V-c each such lamp must provide a luminous intensity of not less than that specified in Table V-c in any direction throughout the pattern defined by the corner points specified in Table V-c for each such lamp when measured in accordance with the photometry test requirements of this standard.

S6.4.4 *Legacy visibility alternative.* As an alternative to S6.4.3, each passenger car and motorcycle, and each multipurpose passenger vehicle, truck, trailer, and bus that is of less than 2032 mm overall width, that are

manufactured on or before September 1, 2011, and each multipurpose passenger vehicle, truck, trailer, and bus that is of 2032 mm or more overall width, that are manufactured on or before September 1, 2014, must have each lamp located so that it meets the visibility requirements specified in Table V-d.

S6.4.5 *School bus signal lamp aiming*. Each school bus signal lamp must be mounted on the vehicle with their aiming plane vertical and normal to the vehicle longitudinal axis. Aim tolerance must be no more than 5 in vertically and 10 in horizontally at 25 ft from the lamp. If the lamps are aimed or inspected by use of the SAE J602, *Headlamp Aiming Device for Mechanically Aimable Sealed Beam Headlamp Units*, (August 1963) (incorporated by reference, see 571.108 S5.2 of this title), the graduation settings for aim must be 2° D and 0° sideways for aiming and the limits must be 3° U to 7° D and from 10° R to 10° L for inspection.

S6.5 *Marking*. A summary of the marking requirements of this standard and their location in the standard is contained in Table III.

S6.5.1 *DOT marking*. The lens of each original equipment and replacement headlamp, and of each original equipment and replacement beam contributor, and each replacement headlamp lens for an integral beam or replaceable bulb headlamp, must be marked with the symbol ''DOT'' either horizontally or vertically to indicate certification under 49 U.S.C. 30115.

S6.5.1.1 The DOT marking requirements for conspicuity materials are specified in S8.2 of this standard.

S6.5.1.2 Each original equipment or replacement lamp or reflective device specified in Table I, except for a headlamp, or an item of associated equipment specified in S9 may be marked with the symbol ''DOT'' which constitutes a certification that it conforms to the requirements of this standard.

S6.5.2 *DRL marking*. Each original equipment and replacement lamp used as a daytime running lamp (DRL), unless optically combined with a headlamp, must be permanently marked ''DRL'' on its lens in letters not less than 3 mm high.

S6.5.3 *Headlamp markings*.

S6.5.3. *Trademark*. The lens of each original and replacement equipment headlamp, and of each original and replacement equipment beam contributor must be marked with the name and/or trademark registered with the U.S. Patent and Trademark Office of the manufacturer of such headlamp or beam contributor, of its importer, or any manufacturer of a vehicle equipped with such headlamp or beam contributor. Nothing in this standard authorizes the marking of any such name and/or trademark by one who is not the owner, unless the owner has consented to it.

S6.5.3.2 *Voltage and trade number*. Each original and replacement equipment headlamp, and each original and replacement equipment beam contributor must be marked with its voltage and with its part or trade number.

S6.5.3.3 *Sealed beam headlamp markings*.

S6.5.3.3.1 Each sealed beam headlamp lens must be molded with ''SEALED BEAM'' and the appropriate designation code as shown in Table II in characters no less than 6.35 mm in size.

S6.5.3.3.2 The face of any character molded on the surface of the lens must not be raised more than 0.5 mm above the lens surface.

S6.5.3.3.3 Type 1C1, 2C1, and 2D1 headlamps must have no raised markings on the outside surface of the lens between the diameters of 40 mm and 90 mm about the lens center.

S6.5.3.3.4 Type 1A1, 2A1, 2B1, and 2E1 headlamps must have no raised markings on the outside surface of the lens within a diameter of 70 mm about the lens center.

S6.5.3.3.5 Type LF, UF, 1G1, 2G1, and 2H1 headlamps must have no raised markings on the outside surface of the lens within a diameter of 35 mm about the lens center.

S6.5.3.3.6 A Type 1C1 replacement headlamp may be marked ''1'' rather than ''1C1''. A Type 2C1 replacement headlamp may be marked ''2'' rather than ''2C1''. A Type 2D1 replacement headlamp may be marked ''TOP'' or ''2'' rather than ''2D1''.

S6.5.3.4 *Replaceable bulb headlamp markings*.

S6.5.3.4.1 The lens of each replaceable bulb headlamp must bear permanent marking in front of each replaceable light source with which it is equipped that states either: The HB Type, if the light source conforms to S11 of this standard for filament light sources, or the bulb marking/designation provided in compliance with Section VIII of appendix A of 49 CFR Part 564 (if the light source conforms to S11 of this standard for discharge light sources).

S6.5.3.4.1.1 No marking need be provided if the only replaceable light source in the headlamp is type HB1.

S6.5.3.5 *Additional headlamp markings*. Additional marking requirements for headlamps are found in, S10.14.4, S10.15.4, S10.17.2, S10.18.5, S10.18.7, and S10.18.9 of this standard.

S6.6 *Associated equipment*.

S6.6.1 All vehicles to which this standard applies, except trailers, must be equipped with a turn signal operating unit, a turn signal flasher, a turn signal pilot indicator, a headlamp beam switching device, and an upper beam headlamp indicator meeting the requirements of S9.

S6.6.2 All vehicles to which this standard applies except trailers and motorcycles must be equipped with a vehicular hazard warning

operating unit, a vehicular hazard warning signal flasher, and a vehicular hazard warning signal pilot indicator meeting the requirements of S9.

S6.6.3 *License plate holder*. Each rear license plate holder must be designed and constructed to provide a substantial plane surface on which to mount the plate. The plane of the license plate mounting surface and the plane on which the vehicle stands must be perpendicular within ± 15°.

S6.7 *Replacement equipment*.

S6.7.1 *General*.

S6.7.1.1 Each replacement lamp, reflective device, or item of associated equipment, including a combination lamp, must:

(a) Be designed to conform to meet all requirements specified in this standard for that type of lamp, reflective device, or other item of equipment (in the case of a combination lamp, it must meet these requirements for each function); and

(b) Include all of the functions of the lamp, reflective device, or item of associated equipment, including a combination lamp, it is designed to replace or is capable of replacing (other than functions not required by this standard).

S6.7.1.2 Each replacement lamp, reflective device, or item of associated equipment, including a combination lamp, which is designed or recommended for particular vehicle models must be designed so that it does not take the vehicle out of compliance with this standard when the individual device is installed on the vehicle. Except as provided in S6.7.1.3, the determination of whether a vehicle would be taken out of compliance with this standard when an individual device is installed on the vehicle is made without regard to whether additional devices, including separate lamps or reflective devices sold together with the device, would also be installed.

S6.7.1.3 In the case of a lamp or other device that is used on each side of the vehicle in pairs, the determination (for the purposes of S6.7.1.2) of whether a vehicle would be taken out of compliance with this standard when an individual device is installed on the vehicle is made assuming that the other matched paired device would be installed on the other side of the vehicle, whether or not the matched paired devices are sold together. This provision does not limit the responsibilities of manufacturers, distributors, dealers or motor vehicle repair businesses under 49 U.S.C. 30122, *Making safety devices and elements inoperative*.

S6.7.2 *Version of this standard*. The requirements of S6.7.1 must be met, at the option of the manufacturer, using either the current version of this standard or the standard in effect at the time of manufacture of the original equipment being replaced.

S7 *Signal lamp requirements*.

S7.1 *Turn signal lamps*.

S7.1.1 *Front turn signal lamps*.

S7.1.1.1 *Number*. See Tables I–a and I–c.

S7.1.1.2 *Color of light*. See Tables I–a and I–c.

S7.1.1.3 *Mounting location*. See Tables I–a and I–c.

S7.1.1.4 *Mounting height*. See Tables I–a and I–c.

S7.1.1.5 *Activation*. See Tables I–a and I–c.

S7.1.1.6 *Effective projected luminous lens area*. See Table IV–a.

S7.1.1.7 *Visibility*. See S6.4.

S7.1.1.8 *Indicator*. See S9.3.

S7.1.1.9 *Markings*. See S6.5.

S7.1.1.10 *Spacing to other lamps*.

S7.1.1.10.1 Each front turn signal lamp must also be designed to comply with any additional photometry requirements based on its installed spacing to other lamps as specified by this section. Where more than one spacing relationship exists for a turn signal lamp the requirement must be the one that specifies the highest luminous intensity multiplier of Tables VI–a and VI–b.

S7.1.1.10.2 *Spacing measurement for non-reflector lamps*. For any front turn signal lamp that does not employ a reflector to meet photometric requirements, the spacing must be measured from the light source of the turn signal lamp to the lighted edge of any lower beam headlamp, or any lamp such as an auxiliary lower beam headlamp or fog lamp used to supplement the lower beam headlamp.

S7.1.1.10.3 *Spacing measurement for lamps with reflectors*. For any front turn signal lamp which employs a reflector, such as a parabolic reflector, to meet photometric requirements, the spacing must be measured from the geometric centroid of the turn signal lamp effective projected luminous lens area to the lighted edge of any lower beam headlamp, or any lamp such as an auxiliary lower beam headlamp or fog lamp used to supplement the lower beam headlamp.

S7.1.1.10.4 *Spacing based photometric multipliers*.

(a) where the spacing measurement of S7.1.1.10.2 or S7.1.1.10.3 between a turn signal lamp and the lighted edge of any lower beam headlamp is less than 100 mm the photometric multiplier must be 2.5.

(b) where the spacing measurement of S7.1.1.10.2 or S7.1.1.10.3 between a turn signal lamp and the lighted edge of any lamp such as an auxiliary lower beam headlamp or fog lamp used to supplement the lower beam headlamp is at least 75 mm but less than 100 mm the photometric multiplier of Table VI must be 1.5.

(c) where the spacing measurement of S7.1.1.10.2 or S7.1.1.10.3 between a turn signal lamp and the lighted edge of any lamp such as an auxiliary lower beam headlamp or fog lamp used to supplement the lower beam headlamp is at least 60 mm but less than 75 mm the photometric multiplier must be 2.0.

(d) where the spacing measurement of S7.1.1.10.2 or S7.1.1.10.3 between a turn signal lamp and the lighted edge of any lamp such as an auxiliary lower beam headlamp or fog lamp used to supplement the lower beam headlamp is less than 60 mm the photometric multiplier must be 2.5.

S7.1.1.11 *Multiple compartments and multiple lamps.*

S7.1.1.11.1 A multiple compartment lamp or multiple lamps may be used to meet the photometric requirements of a front turn signal lamp.

S7.1.1.11.2 If a multiple compartment lamp or multiple lamps are used on a passenger car or on a multipurpose passenger vehicle, truck, bus, or trailer of less than 2032 mm in overall width, and the distance between adjacent light sources does not exceed 560 mm for two compartment or lamp arrangements and does not exceed 410 mm for three compartments or lamp arrangements, then the combination of the compartments or lamps must be used to meet the photometric requirements for the corresponding number of lighted sections specified in Tables VI–a or VI–b.

S7.1.1.11.3 If the distance between adjacent light sources exceeds the previously stated dimensions, each compartment or lamp must comply with the photometric requirements for one lighted section specified in Tables VI–a or VI–b

S7.1.1.11.4 *Lamps installed on vehicles 2032 mm or more in overall width.* Multiple compartment front turn signal lamps installed on multipurpose passenger vehicles, trucks, and buses 2032 mm or more in overall width require measurement of the photometrics for the entire lamp and not for individual compartments.

S7.1.1.12 *Ratio to parking lamps and clearance lamps.*

S7.1.1.12.1 When a parking lamp, or a clearance lamp on a multipurpose passenger vehicle, truck, trailer, or bus of 2032 mm or more in overall width, is combined with a front turn signal lamp, the luminous intensity of the front turn signal lamp at each identified test point must not be less than the luminous intensity of the parking lamp or clearance lamp at that same test point times the multiplier shown for that test point in Tables VI-a or VI-b.

S7.1.1.12.2 If a multiple compartment or multiple lamp arrangement is used on a passenger car or on a multipurpose passenger vehicle, truck, bus, or trailer of less than 2032 mm in overall width, and the distance between the optical axes for both the parking lamp and turn signal lamp is within 560 mm for two compartment or lamp arrangements or 410 mm for three compartment or lamp arrangements, then the ratio must be computed with all compartments or lamps lighted.

S7.1.1.12.3 If a multiple compartment or multiple lamp arrangement is used and the distance between optical axes for one of the functions exceeds 560 mm for two compartment or lamp arrangements or 410 mm for three compartments or lamp arrangements, then the ratio must be computed for only those compartments or lamps where the parking lamp and turn signal lamp are optically combined.

S7.1.1.12.4 Where the clearance lamp is combined with the turn signal lamp, and the maximum luminous intensity of the clearance lamp is located below horizontal and within an area generated by a 1.0 radius around a test point, the ratio for the test point may be computed using the lowest value of the clearance lamp luminous intensity within the generated area.

S7.1.1.13 *Photometry.*

S7.1.1.13.1 When tested according to the procedure of S14.2.1, each front turn signal lamp must be designed to conform to the base photometry requirements plus any applicable multipliers as shown in Tables VI–a and VI–b for the number of lamp compartments or individual lamps and the type of vehicle it is installed on.

S7.1.1.13.2 As an alternative to S7.1.1.13.1, a front turn signal lamp installed on a motorcycle may be designed to conform to the photometry requirements of Table XIII-a when tested according to the procedure of S14.2.1.

S7.1.1.14 *Physical tests.* Each front turn signal lamp must be designed to conform to the performance requirements of the vibration test, moisture test, dust test, and corrosion test of S14.5, and the color test and plastic optical material test of S14.4.

S7.1.2 *Rear turn signal lamps.*

S7.1.2.1 *Number.* See Tables I–a, I–b, and I–c.

S7.1.2.2 *Color of light.* See Tables I–a, I–b, and I–c.

S7.1.2.3 *Mounting location.* See Tables I–a, I–b, and I–c and S6.1.3.2.

S7.1.2.4 *Mounting height.* See Tables I–a, I–b, and I–c.

S7.1.2.5 *Activation.* See Tables I–a, I–b, and I–c.

S7.1.2.6 *Effective projected luminous lens area.* See Table IV–a.

S7.1.2.7 *Visibility.* See S6.4.

S7.1.2.8 *Indicator.* See S9.3.

S7.1.2.9 *Markings.* See S6.5.

S7.1.2.10 *Spacing to other lamps.* No requirement.

S7.1.2.11 *Multiple compartments and multiple lamps.*

S7.1.2.11.1 A multiple compartment lamp or multiple lamps may be used to meet the photometric requirements of a rear turn signal lamp provided the requirements of S6.1.3.2 are met

S7.1.2.11.2 If a multiple compartment lamp or multiple lamps are used on a passenger car or on a multipurpose passenger vehicle, truck, bus, or trailer of less than 2032 mm in overall width, and the distance between adjacent light sources does not exceed 560 mm for two compartment or lamp arrangements and does not exceed 410 mm for three compartment or lamp arrangements, then the combination of the compartments or lamps must be used to meet the photometric requirements for the corresponding number of lighted sections specified in Table VII.

S7.1.2.11.3 If the distance between adjacent light sources exceeds the previously stated dimensions, each compartment or lamp must comply with the photometric requirements for one lighted section specified in Table VII.

S7.1.2.11.4 *Lamps installed on vehicles 2032 mm or more in overall width.* Multiple compartment rear turn signal lamps installed on multipurpose passenger vehicles, trucks, and buses 2032 mm or more in overall width require measurement of the photometrics for the entire lamp and not for individual compartments.

S7.1.2.12 *Ratio to taillamps and clearance lamps.*

S7.1.2.12.1 When a taillamp, or a clearance lamp on a multipurpose passenger vehicle, truck, trailer, or bus of 2032 mm or more in overall width, is combined with a rear turn signal lamp, the luminous intensity of the rear turn signal lamp at each identified test point must not be less than the luminous intensity of the taillamp or clearance lamp at that same test point times the multiplier shown for that test point in Table VII.

S7.1.2.12.2 If a multiple compartment or multiple lamp arrangement is used on a passenger car or on a multipurpose passenger vehicle, truck, bus, or trailer of less than 2032 mm in overall width, and the distance between the optical axes for both the taillamp and turn signal lamp is within 560 mm for two compartment or lamp arrangement or 410 mm for three compartments or lamp arrangements, then the ratio must be computed with all compartments or lamps lighted.

S7.1.2.12.3 If a multiple compartment or multiple lamp arrangement is used and the distance between optical axes for one of the functions exceeds 560 mm for two compartment or lamp arrangements or 410 mm for three compartment or lamp arrangements, then the ratio must be computed for only those compartments or lamps where the taillamp and turn signal lamp are optically combined.

S7.1.2.12.4 Where the taillamp or clearance lamp is combined with the turn signal lamp, and the maximum luminous intensity of the taillamp or clearance lamp is located below horizontal and within an area generated by a 0.5° radius around a test point for a taillamp on a passenger car or on a multipurpose passenger vehicle, truck, bus, or trailer of less than 2032 mm in overall width, or by a 1.0° radius around a test point for a taillamp or clearance lamp on a vehicle 2032 mm or more in overall width, the ratio for the test point may be computed using the lowest value of the taillamp or clearance lamp luminous intensity within the generated area.

S7.1.2.13 *Photometry.*

S7.1.2.13.1 Each rear turn signal lamp must be designed to conform to the photometry requirements of Table VII, when tested according to the procedure of S14.2.1, for the number of lamp compartments or individual lamps, the type of vehicle it is installed on, and the lamp color as specified by this section.

S7.1.2.13.2 As an alternative to S7.1.2.13.1, a rear turn signal lamp installed on a motorcycle may be designed to conform to the photometry requirements of Table XIII-a when tested according to the procedure of S14.2.1.

S7.1.2.14 *Physical tests.* Each rear turn signal lamp must be designed to conform to the performance requirements of the vibration test, moisture test, dust test, and corrosion test of S14.5, and the color test and plastic optical material test of S14.4.

S7.1.3 *Combined lamp bulb indexing.*

S7.1.3.1 Each turn signal lamp optically combined with a taillamp or a parking lamp, or clearance lamp where installed on a vehicle 2032 mm or more in overall width, where a two-filament bulb is used must have a bulb with an indexing base and a socket designed so that bulbs with non-indexing bases cannot be used.

S7.1.3.2 Removable sockets must have an indexing feature so that they cannot be reinserted into lamp housings in random positions, unless the lamp will perform its intended function with random light source orientation.

S7.2 *Taillamps.*

S7.2.1 *Number.* See Tables I-a, I-b, and I-c.

S7.2.2 *Color of light.* See Tables I-a, I-b, and I-c.

S7.2.3 *Mounting location.* See Tables I-a, I-b, and I-c and S6.1.3.2.

S7.2.4 *Mounting height.* See Tables I-a, I-b, and I-c.

S7.2.5 *Activation.* See Tables I-a, I-b, and I-c.

S7.2.6 *Effective projected luminous lens area.* No requirement.

S7.2.7 *Visibility.* See S6.4.

S7.2.8 *Indicator.* No requirement.

S7.2.9 *Markings.* See S6.5.

S7.2.10 *Spacing to other lamps.* No requirement.

S7.2.11 *Multiple compartments and multiple lamps.*

S7.2.11.1 A multiple compartment lamp or multiple lamps may be used to meet the photometric requirements of a taillamp provided the requirements of S6.1.3.2 are met.

S7.2.11.2 If a multiple compartment lamp or multiple lamps are used and the distance between the optical axes does not exceed 560 mm for two compartment or lamp arrangements and does not exceed 410 mm for three compartment or lamp arrangements, then the combination of the compartments or lamps must be used to meet the photometric requirements for the corresponding number of lighted sections specified in Table VIII.

S7.2.11.3 If the distance between optical axes exceeds the previously stated dimensions, each compartment or lamp must comply with the photometric requirements for one lighted section specified in Table VIII.

S7.2.11.4 *Taillamps installed on vehicles 2032 mm or more in overall width*. A maximum of two taillamps and/or two compartments per side may be mounted closer together than 560 mm providing that each compartment and/or lamp meets the single lighted section photometric requirements specified in Table VIII. Each lamp and/or compartment utilized in this manner must meet the single lighted section requirements for all functions for which it is designed.

S7.2.12 *Ratio*. See S7.1.2.12 for rear turn signal lamps and S7.3.12 for stop lamps.

S7.2.13 *Photometry*. Each taillamp must be designed to conform to the photometry requirements of Table VIII, when tested according to the procedure of S14.2.1, for the number of lamp compartments or individual lamps and the type of vehicle it is installed on.

S7.2.14 *Physical tests*. Each taillamp must be designed to conform to the performance requirements of the vibration test, moisture test, dust test, and corrosion test of S14.5, and the color test and plastic optical material test of S14.4.

S7.3 *Stop lamps*.

S7.3.1 *Number*. See Tables I-a, I-b, and I-c.

S7.3.2 *Color of light*. See Tables I-a, I-b, and I-c.

S7.3.3 *Mounting location*. See Tables I-a, I-b, and I-c and S6.1.3.2.

S7.3.4 *Mounting height*. See Tables I-a, I-b, and I-c.

S7.3.5 *Activation*. See Tables I-a, I-b, and I-c.

S7.3.6 *Effective projected luminous lens area*. See Table IV-a.

S7.3.7 *Visibility*. See S6.4.

S7.3.8 *Indicator*. No requirement.

S7.3.9 *Markings*. See S6.5.

S7.3.10 *Spacing to other lamps*. No requirement.

S7.3.11 *Multiple compartments and multiple lamps*.

S7.3.11.1 A multiple compartment lamp or multiple lamps may be used to meet the photometric requirements of a stop lamp provided the requirements of S6.1.3.2 are met.

S7.3.11.2 If a multiple compartment lamp or multiple lamps are used on a passenger car or on a multipurpose passenger vehicle, truck, bus, or trailer of less than 2032 mm in overall width, and the distance between adjacent light sources does not exceed 560 mm for two compartment or lamp arrangements and does not exceed 410 mm for three compartment or lamp arrangements, then the combination of the compartments or lamps must be used to meet the photometric requirements for the corresponding number of lighted sections specified in Table IX.

S7.3.11.3 If the distance between adjacent light sources exceeds the previously stated dimensions, each compartment or lamp must comply with the photometric requirements for one lighted section specified in Table IX.

S7.3.11.4 *Lamps installed on vehicles 2032 mm or more in overall width*. Multiple compartment stop lamps installed on multipurpose passenger vehicles, trucks, and buses 2032 mm or more in overall width require measurement of the photometrics for the entire lamp and not for individual compartments.

S7.3.12 *Ratio to taillamps*.

S7.3.12.1 When a taillamp is combined with a stop lamp, the luminous intensity of the stop lamp at each identified test point must not be less than the luminous intensity of the taillamp at that same test point times the multiplier shown for that test point in Table IX.

S7.3.12.2 If a multiple compartment or multiple lamp arrangement is used on a passenger car or on a multipurpose passenger vehicle, truck, bus, or trailer of less than 2032 mm in overall width, and the distance between the optical axes for both the taillamp and stop lamp is within 560 mm for two compartment or lamp arrangements or 410 mm for three compartment or lamp arrangements, then the ratio must be computed with all compartments or lamps lighted.

S7.3.12.3 If a multiple compartment or multiple lamp arrangement is used and the distance between optical axes for one of the functions exceeds 560 mm for two compartment or lamp arrangements or 410 mm for three compartments or lamp arrangements, then the ratio must be computed for only those compartments or lamps where the taillamp and stop lamp are optically combined.

S7.3.12.4 Where the taillamp is combined with the stop lamp, and the maximum luminous intensity of the taillamp is located below horizontal and within an area generated by a 0.5° radius around a test point for a taillamp on a passenger car or on a multipurpose passenger vehicle, truck, bus, or trailer of less than 2032 mm in overall width, or by a 1.0° radius around a test point

for a taillamp on a vehicle 2032 mm or more in overall width, the ratio for the test point may be computed using the lowest value of the taillamp luminous intensity within the generated area.

S7.3.13 *Photometry*.

S7.3.13.1 Each stop lamp must be designed to conform to the photometry requirements of Table IX, when tested according to the procedure of S14.2.1, for the number of lamp compartments or individual lamps and the type of vehicle it is installed on.

S7.3.13.2 A stop lamp installed on a motor driven cycle may be designed to conform to the photometry requirements of Table XIII-b when tested according to the procedure of S14.2.1.

S7.3.14 *Physical tests*. Each stop lamp must be designed to conform to the performance requirements of the vibration test, moisture test, dust test, and corrosion test of S14.5, and the color test and plastic optical material test of S14.4.

S7.3.15 *Combined lamp bulb indexing*.

S7.3.15.1 Each stop lamp optically combined with a taillamp where a two-filament bulb is used must have a bulb with an indexing base and a socket designed so that bulbs with non-indexing bases cannot be used.

S7.3.15.2 Removable sockets must have an indexing feature so that they cannot be reinserted into lamp housings in random positions, unless the lamp will perform its intended function with random light source orientation.

S7.4 *Side marker lamps*.

S7.4.1 *Number*. See Tables I–a, I–b, and I–c.

S7.4.2 *Color of light*. See Tables I–a, I–b, and I–c.

S7.4.3 *Mounting location*. See Tables I–a, I–b, and I–c.

S7.4.4 *Mounting height*. See Tables I–a, I–b, and I–c.

S7.4.5 *Activation*. See Tables I–a, I–b, and I–c.

S7.4.6 *Effective projected luminous lens area*. No requirement.

S7.4.7 *Visibility*. No requirement.

S7.4.8 *Indicator*. No requirement.

S7.4.9 *Markings*. See S6.5.

S7.4.10 *Spacing to other lamps*. No requirement.

S7.4.11 *Multiple compartments and multiple lamps*. No requirement.

S7.4.12 *Ratio*. No requirement.

S7.4.13 *Photometry*.

S7.4.13.1 Each side marker lamp must be designed to conform to the photometry requirements of Table X, when tested according to the procedure of S14.2.1, for the lamp color as specified by this section.

S7.4.13.2 *Inboard photometry*. For each motor vehicle less than 30 feet in overall length and less than 2032 mm in overall width, the minimum photometric intensity requirements for a side marker lamp may be met for all inboard test points at a distance of 15 feet from the vehicle and on a vertical plane that is perpendicular to the longitudinal axis of the vehicle and located midway between the front and rear side marker lamps.

S7.4.14 *Physical tests*. Each side marker lamp must be designed to conform to the performance requirements of the vibration test, moisture test, dust test, and corrosion test of S14.5, and the color test and plastic optical material test of S14.4.

S7.5 *Clearance and identification lamps*.

S7.5.1 *Number*. See Tables I–a and I–b.

S7.5.2 *Color of light*. See Tables I–a and I–b.

S7.5.3 *Mounting location*. See Tables I–a and I–b.

S7.5.4 *Mounting height*. See Tables I–a and I–b.

S7.5.5 *Activation*. See Tables I–a and I–b.

S7.5.6 *Effective projected luminous lens area*. No requirement.

S7.5.7 *Visibility*. No requirement.

S7.5.8 *Indicator*. No requirement.

S7.5.9 *Markings*. See S6.5.

S7.5.10 *Spacing to other lamps*. No requirement.

S7.5.11 *Multiple compartments and multiple lamps*. No requirement.

S7.5.12 *Ratio*.

S7.5.12.1 *Clearance lamps*. See S7.1.1.12 for front turn signal lamps and S7.1.2.12 for rear turn signal lamps.

S7.5.12.2 *Identification lamps*. No requirement.

S7.5.13 *Photometry*. Each clearance or identification lamp must be designed to conform to the photometry requirements of Table XI, for the applicable lamp color, when tested according to the procedure of S14.2.1.

S7.5.14 *Physical tests*. Each clearance and identification must be designed to conform to the performance requirements of the vibration test, moisture test, dust test, and corrosion test of S14.5, and the color test and plastic optical material test of S14.4.

S7.6 *Backup lamps*.

S7.6.1 *Number*. See Table I–a and S6.1.1.

S7.6.2 *Color of light*.

S7.6.2.1 See Table I–a.

S7.6.2.2 A backup lamp may project incidental red, yellow, or white light through reflectors or lenses that are adjacent, close to, or a part of the lamp assembly.

S7.6.3 *Mounting location*. See Table I–a.

S7.6.4 *Mounting height*. No requirement.

S7.6.5 *Activation*. See Table I–a.

S7.6.6 *Effective projected luminous lens area*. No requirement.

S7.6.7 *Visibility*. See Table V–a.

S7.6.8 *Indicator*. No requirement.

S7.6.9 *Markings*. See S6.5.

S7.6.10 *Spacing to other lamps*. No requirement.

S7.6.11 *Multiple compartments and multiple lamps*. No requirement.

S7.6.12 *Ratio*. No requirement.

S7.6.13 *Photometry*. Each backup lamp must be designed to conform to the photometry requirements of Table XII, when tested according to the procedure of S14.2.1, as specified by this section.

S7.6.14 *Physical tests*. Each backup lamp must be designed to conform to the performance requirements of the vibration test, moisture test, dust test, and corrosion test of S14.5, and the color test and plastic optical material test of S14.4.

S7.7 *License plate lamps*.

S7.7.1 *Number*. See Tables I–a, I–b, and I–c and S6.1.1.

S7.7.2 *Color of light*. See Tables I–a, I–b, and I–c.

S7.7.3 *Mounting location*. See Tables I–a, I–b, and I–c.

S7.7.4 *Mounting height*. See Tables I–a, I–b, and I–c.

S7.7.5 *Activation*. See Tables I–a, I–b, and I–c.

S7.7.6 *Effective projected luminous lens area*. No requirement.

S7.7.7 *Visibility*. No requirement.

S7.7.8 *Indicator*. No requirement.

S7.7.9 *Markings*. See S6.5.

S7.7.10 *Spacing to other lamps*. No requirement.

S7.7.11 *Multiple compartments and multiple lamps*. No requirement.

S7.7.12 *Ratio*. No requirement.

S7.7.13 *Photometry*.

S7.7.13.1 Each license plate lamp must be designed to conform to the photometry requirements of this section when tested according to the procedure of S14.2.2.

S7.7.13.2 An illumination value of no less than 8 lx [0.75 fc] must be met at each test station target location shown in Figure 19.

S7.7.13.3 The ratio of the average of the two highest illumination values divided by the average of the two lowest illumination values must not exceed 20:1 for vehicles other than motorcycles and motor driven cycles.

S7.7.13.4 The ratio of the highest illumination value divided by the average of the two lowest illumination values must not exceed 15:1 for motorcycles and motor driven cycles.

S7.7.14 *Physical tests*. Each license plate lamp must be designed to conform to the performance requirements of the vibration test, moisture test, dust test, and corrosion test of S14.5, and the color test and plastic optical material test of S14.4.

S7.7.15 *Installation*.

S7.7.15.1 Each license plate lamp installed on a vehicle other than a motorcycle or motor driven cycle must be of such size and design as to provide illumination on all parts of a 150 mm by 300 mm test plate.

S7.7.15.2 Each license plate lamp installed on a motorcycle or motor driven cycle must be of such size and design as to provide illumination on all parts of a 100 mm by 175 mm test plate.

S7.7.15.3 The light rays must reach all portions of an imaginary plate of the same size at least 25 mm ahead of the actual plate measured perpendicular to the plane of the plate.

S7.7.15.4 *Incident light from single lamp*. When a single lamp as shown in Figure 20 is used to illuminate the license plate, the lamp and license plate holder must bear such relation to each other that at no point on the plate must the incident light make an angle of less than 8° to the plane of the plate, this angle being measured from the edge of the light emitting surface of the lamp farthest from the surface of the plate.

S7.7.15.5 *Incident light from multiple lamps*. When two or more lamps as shown in Figure 20 are used to illuminate the license plate, the minimum 8° incident light angle must apply only to that portion of the plate which the particular lamp is designed to illuminate. The angle must be measured in the same manner as S7.7.15.4.

S7.8 *Parking lamps*.

S7.8.1 *Number*. See Table I–a.

S7.8.2 *Color of light*. See Table I–a.

S7.8.3 *Mounting location*. See Table I–a.

S7.8.4 *Mounting height*. See Table I–a.

S7.8.5 *Activation*. See Table I–a.

S7.8.6 *Effective projected luminous lens area*. No requirement.

S7.8.7 *Visibility*. See S6.4.

S7.8.8 *Indicator*. No requirement.

S7.8.9 *Markings*. See S6.5.

S7.8.10 *Spacing to other lamps*. No requirement.

S7.8.11 *Multiple compartments and multiple lamps*. No requirement.

S7.8.12 *Ratio*. See S7.1.1.12 for front turn signal lamps.

S7.8.13 *Photometry*. Each parking lamp must be designed to conform to the photometry requirements of Table XIV, when tested according to the procedure of S14.2.1, as specified by this section.

S7.8.14 *Physical tests*. Each parking lamp must be designed to conform to the performance requirements of the vibration test, moisture test, dust test, and corrosion test of S14.5, and the color test and plastic optical material test of S14.4.

S7.9 *High-mounted stop lamps*.

S7.9.1 *Number*. See Table I–a and S6.1.1.2.

S7.9.2 *Color of light*. See Table I–a.

S7.9.3 *Mounting location*. See Table I–a.

S7.9.4 *Mounting height*. See Table I–a and S6.1.4.1.

S7.9.5 *Activation*. See Table I–a.

S7.9.6 *Effective projected luminous lens area*. See Table IV–b.

S7.9.7 *Visibility*. See Table V–a.

S7.9.8 *Indicator*. No requirement.

S7.9.9 *Markings*. See S6.5

S7.9.10 *Spacing to other lamps*. No requirement.

S7.9.11 *Multiple compartments and multiple lamps*. No requirement.

S7.9.12 *Ratio*. No requirement.

S7.9.13 *Photometry*. Each high-mounted stop lamp must be designed to conform to the photometry requirements of Table XV, when tested according to the procedure of S14.2.1, as specified by this section.

S7.9.14 *Physical tests*.

S7.9.14.1.1 Each high-mounted stop lamp must be designed to conform to the performance requirements of the vibration test of S14.5, and the color test and plastic optical material test of S14.4.

S7.9.14.1.2 Each high-mounted stop lamp that is not mounted inside the vehicle must be designed to conform to the performance requirements of the moisture test, dust test, and corrosion test of S14.5.

S7.10 *Daytime running lamps (DRLs)*.

S7.10.1 *Number*. See Table I–a.

S7.10.2 *Color of light*. See Table I–a.

S7.10.3 *Mounting location*. See Table I–a.

S7.10.4 *Mounting height*. See Table I–a. and S7.10.13(b).

S7.10.5 *Activation*. See Table I–a. and S7.10.10.1(c).

S7.10.6 *Effective projected luminous lens area*. No requirement.

S7.10.7 *Visibility*. No requirement.

S7.10.8 *Indicator*. No requirement.

S7.10.9 *Markings*. See S6.5.

S7.10.10 *Spacing to other lamps*.

S7.10.10.1 *Spacing to turn signal lamps*. Each DRL not optically combined with a turn signal lamp must be located on the vehicle so that the distance from its lighted edge to the optical center of the nearest turn signal lamp is not less than 100 mm unless,

(a) The luminous intensity of the DRL is not more than 2,600 cd at any location in the beam and the turn signal lamp meets 2.5 times the base front turn signal photometric requirements, or

(b) The DRL is optically combined with a lower beam headlamp and the turn signal lamp meets 2.5 times the base front turn signal photometric requirements, or

(c) The DRL is deactivated when the turn signal or hazard warning signal lamp is activated.

S7.10.11 *Multiple compartments and multiple lamps*. No requirement.

S7.10.12 *Ratio*. No requirement.

S7.10.13 *Photometry*. Each DRL must have a luminous intensity not less than 500 cd at test point H–V, nor more than 3,000 cd at any location in the beam when tested according to the procedure of S14.2.4 as specified by this section, unless it is:

(a) A lower beam headlamp intended to operate as a DRL at full voltage, or a voltage lower than used to operate it as a lower beam headlamp, or

(b) An upper beam headlamp intended to operate as a DRL, whose luminous intensity at test point H–V is not more than 7,000 cd, and whose mounting height is not higher than 864 mm.

S7.10.14 *Physical tests*. Each DRL that is not combined with another required lamp must be designed to conform to the performance requirements of the color test and plastic optical material test of S14.4.

S7.11 *School bus signal lamps*.

S7.11.1 *Number*. See Table I–a.

S7.11.2 *Color of light*. See Table I–a.

S7.11.3 *Mounting location*. See Table I–a.

S7.11.4 *Mounting height*. See Table I–a.

S7.11.5 *Activation*. See Table I–a.

S7.11.6 *Effective projected luminous lens area*. See Table IV–c.

S7.11.7 *Visibility*. See Table V–a.

S7.11.8 *Indicator*. No requirement.

S7.11.9 *Markings*. See S6.5.

S7.11.10 *Spacing to other lamps*. No requirement.

S7.11.11 *Multiple compartments and multiple lamps*. No requirement.

S7.11.12 *Ratio*. No requirement.

S7.11.13 *Photometry*. Each school bus signal lamp must be designed to conform to the photometry requirements of Table XVII, when tested according to the procedure of S14.2.1, for the lamp color as specified by this section.

S7.11.14 *Physical tests*. Each school bus signal lamp must be designed to conform to the performance requirements of the vibration test, moisture test, dust test, and corrosion test of S14.5, and the color test and plastic optical material test of S14.4.

S8 *Reflective device requirements*.

S8.1 *Reflex reflectors*.

S8.1.1 *Number*. See Tables I–a, I–b, and I–c.

S8.1.2 *Color*. See Tables I–a, I–b, and I–c.

S8.1.3 *Mounting location*. See Tables I–a, I–b, and I–c.

S8.1.4 *Mounting height*. See Tables I–a, I–b, and I–c.

S8.1.5 *Activation*. No requirement.

S8.1.6 *Effective projected luminous lens area*. No requirement.

S8.1.7 *Visibility*. No requirement.

S8.1.8 *Indicator*. No requirement.

S8.1.9 *Markings*. See S6.5.

S8.1.10 *Spacing to other lamps or reflective devices*. No requirement.

S8.1.11 *Photometry*. Each reflex reflector must be designed to conform to the photometry requirements of Table XVI–a when tested according to the procedure of S14.2.3 for the reflex reflector color as specified by this section.

S8.1.12 *Physical tests*. Each reflex reflector must be designed to conform to the performance requirements of the vibration test, moisture test, dust test, and corrosion test of S14.5, and the color test and plastic optical material test of S14.4.

S8.1.13 *Alternative side reflex reflector material*. Reflective material conforming to Federal Specification L–S–300, Sheeting and

Tape, Reflective; Non-exposed Lens, Adhesive Backing, (September 7, 1965) (incorporated by reference, see 571.108 S5.2 of this title), may be used for side reflex reflectors if this material as used on the vehicle, meets the performance requirements of Table XVI–a.

S8.2 *Conspicuity systems.* The requirement for conspicuity systems may be met with retroreflective sheeting, conspicuity reflex reflectors, or a combination of retroreflective sheeting and conspicuity reflex reflectors.

S8.2.1 *Retroreflective sheeting.*

S8.2.1.1 Retroreflective sheeting must consist of a smooth, flat, transparent exterior film with retroreflective elements embedded or suspended beneath the film so as to form a non-exposed retroreflective optical system.

S8.2.1.2 *Retroreflective sheeting material.* Retroreflective sheeting must meet the requirements, except photometry, of ASTM D 4956–90, Standard for Retroreflective Sheeting for Traffic Control, (incorporated by reference, see 571.108 S5.2 of this title) for Type V Sheeting. Sheeting of Grade DOT–C2 of no less than 50 mm wide, Grade DOT–C3 of no less than 75 mm wide, or Grade DOT–C4 of no less than 100 mm wide may be used.

S8.2.1.3 *Certification marking.* The letters DOT–C2, DOT–C3, or DOT–C4, as appropriate, constituting a certification that the retroreflective sheeting conforms to the requirements of this standard, must appear at least once on the exposed surface of each white or red segment of retroreflective sheeting, and at least once every 300 mm on retroreflective sheeting that is white only. The characters must be not less than 3 mm high, and must be permanently stamped, etched, molded, or printed in indelible ink.

S8.2.1.4 *Application pattern.*

S8.2.1.4.1 *Alternating red and white materials.*

S8.2.1.4.1.1 As shown in Figures 12–1 and 12–2, where alternating material is installed, except for a segment that is trimmed to clear obstructions, or lengthened to provide red sheeting near red lamps, alternating material must be installed with each white and red segment having a length of 300 ± 150 mm.

S8.2.1.4.1.2 Neither white nor red sheeting must represent more than two thirds the aggregate of any continuous strip marking the width of a trailer, or any continuous or broken strip marking its length.

S8.2.1.5 *Application location.* Need not be installed, as illustrated in Figure 12–2, on discontinuous surfaces such as outside ribs, stake post pickets on platform trailers, and external protruding beams, or to items of equipment such as door hinges and lamp bodies on trailers and body joints, stiffening beads, drip rails, and rolled surfaces on truck tractors.

S8.2.1.6 *Application spacing.* As illustrated in Figure 12–2, the edge of any white sheeting must not be located closer than 75 mm to the edge of the luminous lens area of any red or amber lamp that is required by this standard. The edge of any red sheeting must not be located closer than 75 mm to the edge of the luminous lens area of any amber lamp that is required by this standard.

S8.2.1.7 *Photometry.* Each retroreflective sheeting must be designed to conform to the photometry requirements of Table XVI–c when tested according to the procedure of S14.2.3 for the color and grade as specified by this section.

S8.2.2 *Conspicuity reflex reflectors.*

S8.2.2.1 *Certification marking.* The exposed surface of each conspicuity reflex reflector must be marked with the letters DOT–C which constitutes a certification that the reflector conforms to the conspicuity reflex reflector requirements of this standard. The certification must be not less than 3 mm high, and must be permanently stamped, etched, molded, or printed in indelible ink.

S8.2.2.2 *Application pattern.*

S8.2.2.2.1 *Alternating red and white materials.* Conspicuity reflex reflectors must be installed in a repetitive pattern of two or three white reflectors alternating with two or three red reflectors, with the center of each reflector not more than 100 mm from the center of each adjacent reflector.

S8.2.2.2.2 *White material.* White conspicuity reflex reflectors must be installed with the center of each reflector not more than 100 mm from the center of each adjacent reflector.

S8.2.2.3 *Photometry.*

S8.2.2.3.1 Each red conspicuity reflex reflector must be designed to conform to the photometry requirements of Table XVI–a for a red reflex reflector and Table XVI–b for a red conspicuity reflex reflector when tested according to the procedure of S14.2.3 as specified by this section.

S8.2.2.3.2 Each white conspicuity reflex reflector installed in only a horizontal orientation must be designed to conform to the photometry requirements of Table XVI–a for a white reflex reflector and Table XVI–b for a white horizontal conspicuity reflex reflector when tested according to the procedure of S14.2.3 as specified by this section.

S8.2.2.3.3 Each white conspicuity reflex reflector installed in a vertical orientation must be designed to conform to the photometry requirements of Table XVI–a for a white reflex reflector, and Table XVI–b for a white horizontal conspicuity reflex reflector and a white vertical conspicuity reflex reflector when tested according to the procedure of S14.2.3 as specified by this section.

S8.2.3 *Conspicuity system installation on trailers.*

S8.2.3.1 *Trailer rear.*

S8.2.3.1.1 *Element 1—alternating red and white materials.* As shown in Figure 11, a strip of sheeting or conspicuity reflex reflectors, as horizontal as practicable, must be applied across the full width of the trailer, as close to the extreme edges as practicable, and as close as practicable to not less than 375 mm and not more than 1525 mm above the road surface at the strip centerline with the trailer at curb weight.

S8.2.3.1.2 *Element 2—white.* (not required for container chassis or for platform trailers without bulkheads).

S8.2.3.1.2.1 As shown in Figure 11, two pairs of strips of sheeting or conspicuity reflex reflectors, each pair consisting of strips 300 mm long of Grade DOT–C2, DOT–C3, or DOT–C4, must be applied horizontally and vertically to the right and left upper contours of the body, as viewed from the rear, as close to the top of the trailer and as far apart as practicable.

S8.2.3.1.2.2 If the perimeter of the body, as viewed from the rear, is other than rectangular, the strips may be applied along the perimeter, as close as practicable to the uppermost and outermost areas of the rear of the body on the left and right sides.

S8.2.3.1.3 *Element 3—alternating red and white materials.* (not required for trailers without underride protection devices).

S8.2.3.1.3.1 As shown in Figure 11, a strip of Grade DOT–C2 sheeting no less than 38 mm wide or reflectors must be applied across the full width of the horizontal member of the rear underride protection device.

S8.2.3.2 *Trailer side—alternating red and white materials.*

S8.2.3.2.1 As shown in Figure 11, a strip of sheeting or conspicuity reflex reflectors must be applied to each side, as horizontal as practicable, originating and terminating as close to the front and rear as practicable, as close as practicable to not less than 375 mm and not more than 1525 mm above the road surface at the strip centerline at curb weight, except that at the location chosen the strip must not be obscured in whole or in part by other motor vehicle equipment or trailer cargo.

S8.2.3.2.2 The strip need not be continuous as long as not less than half the length of the trailer is covered and the spaces are distributed as evenly as practicable.

S8.2.3.2.3 If necessary to clear rivet heads or other similar obstructions, Grade DOT–C2 sheeting may be separated into two 25 mm wide strips of the same length and color, separated by a space of not more than 25 mm and used in place of the retroreflective sheeting that would otherwise be applied.

S8.2.4 *Conspicuity system installation on truck tractors.*

S8.2.4.1 *Element 1—alternating red and white materials.* As shown in Figure 13, two strips of sheeting or conspicuity reflex reflectors, each not less than 600 mm long, located as close as practicable to the edges of the rear fenders, mudflaps, or the mudflap support brackets, must be applied to mark the width of the truck tractor.

S8.2.4.1.1 The strips must be mounted as horizontal as practicable, in a vertical plane facing the rear, on the rear fenders, on the mudflap support brackets, on plates attached to the mudflap support brackets, or on the mudflaps.

S8.2.4.1.2 Strips on mudflaps must be mounted not lower than 300 mm below the upper horizontal edge of the mudflap. If the vehicle is certified with temporary mudflap support brackets, the strips must be mounted on the mudflaps or on plates transferable to permanent mudflap support brackets.

S8.2.4.1.3 For a truck tractor without mudflaps, the strips may be mounted outboard of the frame on brackets behind the rear axle or on brackets ahead of the rear axle and above the top of the rear tires at unladen vehicle height, or they may be mounted directly or indirectly to the back of the cab as close to the outer edges as practicable, above the top of the tires, and not more than 1525 mm above the road surface at unladen vehicle height.

S8.2.4.1.4 If the strips are mounted on the back of the cab, no more than 25% of their cumulative area may be obscured by vehicle equipment as determined in a rear orthogonal view.

S8.2.4.2 *Element 2—white.* As shown in Figure 13, two pairs of strips of sheeting or conspicuity reflex reflectors, each pair consisting of strips 300 mm long, must be applied horizontally and vertically as practicable to the right and left upper contours of the cab, as close to the top of the cab and as far apart as practicable.

S8.2.4.2.1 No more than 25% of their cumulative area may be obscured by vehicle equipment as determined in a rear orthogonal view.

S8.2.4.2.2 If one pair must be relocated to avoid obscuration by vehicle equipment, the other pair may be relocated in order to be mounted symmetrically.

S8.2.4.2.3 If the rear window is so large as to occupy all the practicable space, the material may be attached to the edge of the window itself.

S9 *Associated equipment requirements.*

S9.1 *Turn signal operating unit.*

S9.1.1 The turn signal operating unit installed on passenger cars, multipurpose passenger vehicles, trucks, and buses less than 2032 mm in overall width must be self-canceling by steering wheel rotation and capable of cancellation by a manually operated control.

S9.1.2 *Physical tests.* Each turn signal operating unit must be designed to conform to all applicable performance requirements of S14.9.

S9.2 *Turn signal flasher.*

S9.2.1 The means of producing the turn signal pilot indicator signal may be incorporated in the flasher. A means of producing an audible signal may be incorporated in the flasher.

S9.2.2 *Physical tests.* Each turn signal flasher must be designed to conform to all applicable performance requirements of S14.9.

S9.3 *Turn signal pilot indicator.*

S9.3.1 Each vehicle equipped with a turn signal operating unit where any turn signal lamp is not visible to the driver must also have an illuminated pilot indicator to provide a clear and unmistakable indication that the turn signal system is activated.

S9.3.2 The indicator must consist of one or more lights flashing at the same frequency as the turn signal lamps.

S9.3.3 The indicator must function satisfactorily under all test conditions imposed on the turn signal flasher in S14.9.

S9.3.4 *Indicator size and color.*

S9.3.4.1 If the indicator is located inside the vehicle it must emit a green colored light and have a minimum area equivalent to a 3/16 in diameter circle.

S9.3.4.2 If the indicator is located outside of the vehicle it must emit a yellow light and have a minimum projected illuminated area of 0.1 sq in.

S9.3.5 The minimum required illuminated area of the indicator must be visible to any tangent on the 95th eyellipse as defined in SAE J941b, *Motor Vehicle Driver's Eye Range*, February 1969, (incorporated by reference, see 571.108 S5.2 of this title) with the steering wheel turned to a straight ahead driving position and in the design location for an adjustable wheel or column.

S9.3.6 *Turn signal lamp failure.* Failure of one or more turn signal lamps such that the minimum photometric performance specified in Tables VI or VII is not being met must be indicated by the turn signal pilot indicator by a ''steady on'', ''steady off'', or by a significant change in the flashing rate, except when a variable-load turn signal flasher is used on a multipurpose passenger vehicle, truck, or bus 2032 mm or more in overall width, on a truck that is capable of accommodating a slide in camper, or on any vehicle equipped to tow trailers.

S9.4 *Headlamp beam switching device.* Each vehicle must have a means of switching between lower and upper beams designed and located so that it may be operated conveniently by a simple movement of the driver's hand or foot. The switch must have no dead point and, except as provided by S6.1.5.2, the lower and upper beams must not be energized simultaneously except momentarily for temporary signaling purposes or during switching between beams.

S9.4.1 *Semi-automatic headlamp beam switching device.* As an alternative to S9.4, a vehicle may be equipped with a semi-automatic means of switching between lower and upper beams.

S9.4.1.1 *Operating instructions.* Each semi-automatic headlamp switching device must include operating instructions to permit a driver to operate the device correctly including; how to turn the automatic control on and off, how to adjust the provided sensitivity control, and any other specific instructions applicable to the particular device.

S9.4.1.2 *Manual override.* The device must include a means convenient to the driver for switching to the opposite beam from the one provided.

S9.4.1.3 *Fail safe operation.* A failure of the automatic control portion of the device must not result in the loss of manual operation of both upper and lower beams.

S9.4.1.4 *Automatic dimming indicator.* There must be a convenient means of informing the driver when the device is controlling the headlamps automatically. The device shall not affect the function of the upper beam indicator light.

S9.4.1.5 *Lens accessibility.* The device lens must be accessible for cleaning when the device is installed on a vehicle.

S9.4.1.6 *Mounting height.* The center of the device lens must be mounted no less than 24 in. above the road surface.

S9.4.1.7 *Physical tests.* Each semi-automatic headlamp beam switching device must be designed to conform to all applicable performance requirements of S14.9.

S9.5 *Upper beam headlamp indicator.* Each vehicle must have a means for indicating to the driver when the upper beams of the headlighting system are activated.

S9.5.1 *Indicator size and location.* The upper beam headlamp indicator must have a minimum area equivalent to that of a 3/16 in diameter circle, and be plainly visible to drivers of all heights under normal driving conditions when headlamps are required.

S9.6 *Vehicular hazard warning signal operating unit.*

S9.6.1 The unit may be an independent device or it may be combined with the turn signal operating unit. If combined with the turn signal operating unit, the actuating motion of the hazard function must differ from the actuating motion of the turn signal function.

S9.6.2 *Operating unit switch.* The unit must operate independently of the ignition or equivalent switch. If the actuation of the hazard function requires the operation of more than one switch, a means must be provided for actuating all switches simultaneously by a single driver action.

S9.6.3 *Physical tests.* Each vehicular hazard warning signal operating unit must be designed to conform to all applicable performance requirements of S14.9.

S9.7 *Vehicular hazard warning signal flasher.*

S9.7.1 The means of producing the hazard warning signal pilot indicator signal may be incorporated in the flasher. A means of producing an audible signal may be incorporated in the flasher.

S9.7.2 *Physical tests*. Each vehicular hazard warning signal flasher must be designed to conform to all applicable performance requirements of S14.9.

S9.8 *Vehicular hazard warning signal pilot indicator*.

S9.8.1 In vehicles equipped with right hand and left hand turn signal pilot indicators, both pilot indicators and /or a separate pilot indicator must flash simultaneously while the vehicle hazard warning signal operating unit is turned on.

S9.8.2 In vehicles equipped with a single turn signal pilot indicator, a separate vehicular hazard warning signal pilot indicator must flash and the turn signal pilot indicator may flash while the vehicle hazard warning signal operating unit is turned on.

S9.8.3 The indicator must function satisfactorily under all test conditions imposed on the vehicular hazard warning signal flasher in S14.9.

S9.8.4 *Indicator size and color*. If the vehicular hazard warning signal pilot indicator is not combined with the turn signal pilot indicator, it must emit a red color and have a minimum area equivalent to a 0.5 in diameter circle.

S10 *Headlighting system requirements*.

S10.1 *Vehicle headlighting systems*.

S10.1.1 Each passenger car, multipurpose passenger vehicle, truck and bus must be equipped with a headlighting system conforming to the requirements of Table II and this standard.

S10.1.2 Each motorcycle must be equipped with a headlighting system conforming to S10.17 of this standard or one half of any headlighting system of Table II which provides both a full upper beam and full lower beam.

S10.2 *Aiming*. Each headlamp system installed on a motor vehicle must be aimable in accordance with the requirements of S10.18.

S10.3 *Number*. *See Tables I–a and I–c*.

S10.4 *Color of light*. See Tables I–a and I–c.

S10.5 *Mounting location*. See Tables I–a and I–c and S6.1.3.5.

S10.6 *Mounting height*. See Tables I–a and I–c.

S10.7 *Activation*. See Tables I–a and I–c, Table II, and S6.1.5.

S10.8 *Effective projected luminous lens area*. No requirement.

S10.9 *Visibility*. No requirement.

S10.10 *Indicator*. See S9.5.

S10.11 *Markings*. See S6.5.

S10.12 *Spacing to other lamps*. See S6.1.3.5.

S10.13 *Sealed beam headlighting systems*. All sealed beam headlighting systems must be of a type designated in Table II-a. Each sealed beam headlamp must be designed to conform to the specifications furnished with respect to it pursuant to appendix C of part 564 of this chapter and Table II-a of this standard. The dimensions applicable to the design of a specific type are those identified with an ''I'' for interchangeability specified on the applicable drawing(s) filed in Docket No. NHTSA 98–3397.

S10.13.1 *Installation*. A sealed beam headlighting system must consist of the correct number of designated headlamp units as specified for the applicable system in Table II-a. The units must have their beams activated as specified in Table II-a. A system must provide in total not more than two upper beams and two lower beams.

S10.13.2 *Simultaneous aim*. Type F sealed beam headlamps may be mounted on common or parallel seating and aiming planes to permit simultaneous aiming of both headlamps provided that there is no provision for adjustment between the common or parallel aiming and seating planes of the two lamps. When tested with any conforming Type UF and LF headlamps in accordance with S14.2.5, the assembly (consisting of the Type UF and LF headlamps, mounting rings, the aiming/seating rings, and aim adjustment mechanism) must be designed to conform to the applicable photometric requirements.

S10.13.3 *Photometry*. Each sealed beam headlamp must be designed to conform to the photometry requirements of Table XVIII for upper beam and Table XIX for lower beam as specified in Table II-a for the specific headlamp unit and aiming method, when tested according to the procedure of S14.2.5.

S10.13.4 *Physical tests*.

S10.13.4.1 Each sealed beam headlamp must be designed to conform to the performance requirements of the corrosion test, vibration test, inward force test, torque deflection test, headlamp connector test, headlamp wattage test, and aiming adjustment tests of S14.6.

S10.13.4.2 Each sealed beam headlamp except a Type G or Type H must be designed to conform to the performance requirements of the retaining ring test of S14.6.

S10.13.4.3 Each sealed beam headlamp must be designed to conform to the performance requirements of the color test of S14.4. Each sealed beam headlamp that does not incorporate a glass lens must be designed to conform to the plastic optical materials test of S14.4.

S10.14 *Integral beam headlighting systems*. All integral beam headlighting systems must be of a type designated in Table II-c.

S10.14.1 *Installation*. An integral beam headlighting system must consist of the correct number of designated headlamp units as specified for the applicable system in Table

II-c. The units must have their beams activated as specified in Table II-c. A system must provide in total not more than two upper beams and two lower beams.

S10.14.2 *Aimability*.

S10.14.2.1 A system that incorporates any headlamp or beam contributor that does not have a VHAD as an integral and indivisible part of the headlamp or beam contributor must be designed so that the applicable photometric requirements are met when any correctly aimed and photometrically conforming headlamp or beam contributor is removed from its mounting and aiming mechanism, and is replaced without reaim by any conforming headlamp or beam contributor of the same type.

S10.14.2.2 A system that incorporates more than one beam contributor providing a lower beam, and/or more than one beam contributor providing an upper beam, shall be designed to conform to the on-vehicle aiming requirements specified in S10.18.8.

S10.14.3 *Simultaneous aim*. An integral beam headlighting system consisting of four individual headlamps or beam contributors may have the headlamp units mounted in an assembly to permit simultaneous aiming of the beam(s) contributors, providing that with any complying contributor the assembly complete with all lamps meets the applicable photometric requirements when tested in accordance with S14.2.5.

S10.14.4 *Markings*. An integral beam headlamp with a single light source providing the lower beam must have its lens permanently marked with ''L''. An integral beam headlamp with a single light source providing the upper beam must have its lens permanently marked with ''U''.

S10.14.5 *Additional light sources*. An integral beam headlamp may incorporate light sources that are used for purposes other than headlighting and are capable of being replaced.

S10.14.6 *Photometry*. Each integral beam headlamp must be designed to conform to the photometry requirements of Table XVIII for upper beam and Table XIX for lower beam as specified in Table II-c for the specific headlamp unit and aiming method, when tested according to the procedure of S14.2.5.

S10.14.7 *Physical tests*.

S10.14.7.1 Each integral beam headlamp must be designed to conform to the performance requirements of the corrosion test, temperature cycle test, vibration test, inward force test, headlamp connector test, and aiming adjustment tests of S14.6.

S10.14.7.2 Each integral beam headlamp that is not designed to conform to the performance requirements of the sealing test of S14.6 must be designed to conform to the performance requirements of the connector-corrosion test, dust test, and humidity test of S14.6.

S10.14.7.3 Each integral beam headlamp except those with a glass lens must be designed to conform to the performance requirements of the abrasion test of S14.6.

S10.14.7.4 Each integral beam headlamp except those with a nonreplaceable glass lens must be designed to conform to the performance requirements of the chemical resistance test of S14.6.

S10.14.7.5 Each integral beam headlamp except those with a glass lens and a nonplastic reflector must be designed to conform to the performance requirements of the internal heat test of S14.6.

S10.14.7.6 Each integral beam headlamp incorporating a replaceable lens must be designed to conform to the performance requirements of the chemical resistance of reflectors of replaceable lens headlamps test and the corrosion resistance of reflectors of replaceable lens headlamps test of S14.6.

S10.14.7.7 Each integral beam headlamp capable of being mechanically aimed by externally applied headlamp aiming devices specified in SAE J602 OCT80, Headlamp Aiming Device for Mechanically Aimable Sealed Beam Headlamp Units, (incorporated by reference, see 571.108 S5.2 of this title) must be designed to conform to the performance requirements of the torque deflection test of S14.6.

S10.14.7.8 Each integral beam headlamp must be designed to conform to the performance requirements of the color test of S14.4. Each integral beam headlamp that does not incorporate a glass lens must be designed to conform to the performance requirements of the plastic optical materials test of S14.4.

S10.15 *Replaceable bulb headlighting systems*. All replaceable bulb headlighting systems must be of a type designated in Table II-d.

S10.15.1 *Installation*. A replaceable bulb headlighting system must consist of either two or four headlamps as specified for the applicable system in Table II-d. The headlamps must have their beams activated as specified in Table II-d. A system must provide in total not more than two upper beams and two lower beams and must incorporate not more than two replaceable light sources in each headlamp.

S10.15.2 *Aiming restrictions*. Each replaceable bulb headlamp designed to conform to the external aiming requirements of S10.18.7 must have no mechanism that allows adjustment of an individual light source, or if there are two light sources, independent adjustments of each reflector.

S10.15.3 *Replacement lens reflector units*. Each lens reflector unit manufactured as replacement equipment must be designed to conform to applicable photometry requirements when any replaceable light source designated for such a unit is inserted in it.

S10.15.4 *Markings*.

S10.15.4.1 A replaceable bulb headlamp in a four headlamp system providing lower beam must have its lens permanently marked with ''L''. A replaceable bulb headlamp in a four headlamp system providing upper beam must have its lens permanently marked with ''U''.

S10.15.4.1.1 No such markings are required if the light sources in the headlamp are any combination of dual filament light sources other than HB2.

S10.15.5 *Additional light sources.* A replaceable bulb headlamp may incorporate replaceable light sources that are used for purposes other than headlighting.

S10.15.6 *Photometry.* Each replaceable bulb headlamp must be designed to conform to the photometry requirements of Table XVIII for upper beam and Table XIX for lower beam as specified in Table II-d for the specific headlamp unit and aiming method, when tested according to the procedure of S14.2.5 using any replaceable light source designated for use in the system under test.

S10.15.7 *Physical tests.*

S10.15.7.1 Each replaceable bulb headlamp must be designed to conform to the performance requirements of the corrosion test, corrosion-connector test, dust test, temperature cycle test, humidity test, vibration test, inward force test, headlamp connector test, and aiming adjustment tests of S14.6.

S10.15.7.2 Each replaceable bulb headlamp except those with a glass lens must be designed to conform to the performance requirements of the abrasion test of S14.6.

S10.15.7.3 Each replaceable bulb headlamp except those with a nonreplaceable glass lens must be designed to conform to the performance requirements of the chemical resistance test of S14.6.

S10.15.7.4 Each replaceable bulb headlamp except those with a glass lens and a nonplastic reflector must be designed to conform to the performance requirements of the internal heat test of S14.6.

S10.15.7.5 Each replaceable bulb headlamp incorporating a replaceable lens must be designed to conform to the performance requirements of the chemical resistance of reflectors of replaceable lens headlamps test and the corrosion resistance of reflectors of replaceable lens headlamps test of S14.6.

S10.15.7.6 Each replaceable bulb headlamp capable of being mechanically aimed by externally applied headlamp aiming devices specified in SAE J602 OCT80, *Headlamp Aiming Device for Mechanically Aimable Sealed Beam Headlamp Units,* (incorporated by reference, see 571.108 S5.2 of this title) must be designed to conform to the performance requirements of the torque deflection test of S14.6.

S10.15.7.7 Each replaceable bulb headlamp must be designed to conform to the performance requirements of the color test of S14.4. Each replaceable bulb headlamp that does not incorporate a glass lens must be designed to conform to the performance requirements of the plastic optical materials test of S14.4.

S10.16 *Combination headlighting systems.* All combination headlighting systems must be of a type designated in Table II–b.

S10.16.1 *Installation.* A combination headlighting system must consist of the correct number of designated headlamp units as specified for the applicable system in Table II-b. The units must have their beams activated as specified in Table II-b. A system must provide in total not more than two upper beams and two lower beams. When installed on a motor vehicle, the headlamps (or parts thereof) that provide the lower beam must be of the same type, and provide a symmetrical effective projected luminous lens area when illuminated.

S10.16.2 *Photometry.* Each combination headlamp must be designed to conform to the photometry requirements of Table XVIII for upper beam and Table XIX for lower beam as specified in Table II-b for the specific headlamp unit and aiming method, when tested according to the procedure of S14.2.5.

S10.16.3 *Physical tests.*

S10.16.3.1 Any component headlamp of a combination headlighting system that is a Type F sealed beam headlamp must be designed to conform to the performance requirements of S10.13.4.

S10.16.3.2 Any component headlamp of a combination headlighting system that is an integral beam headlamp must be designed to conform to the performance requirements of S10.14.7.

S10.16.3.3 Any component headlamp of a combination headlighting system that is a replaceable bulb headlamp must be designed to conform to the performance requirements of S10.15.7.

S10.17 *Motorcycle headlighting systems.* A motorcycle headlighting system may consist of:

(a) One half of any headlighting system of Table II which provides both a full upper beam and full lower beam, and is designed to conform to the requirements for that headlamp type. Where more than one lamp must be used, the lamps shall be mounted vertically, with the lower beam as high as practicable, or

(b) A headlighting system designed to conform to the requirements of paragraphs S10.17.1 through S10.17.5.

S10.17.1 *Installation.* The headlighting system installed on a motorcycle must consist of one of the system types specified in this paragraph, and must be located on the front.

S10.17.1.1 *Single headlamp.*

S10.17.1.1.1 If the system consists of a single headlamp, it must be mounted on the vertical centerline of the motorcycle.

S10.17.1.1.2 If the headlamp contains more than one light source, each light source must

be mounted on the vertical centerline with the upper beam no higher than the lower beam, or horizontally disposed about the vertical centerline and mounted at the same height.

S10.17.1.1.3 If the light sources are horizontally disposed about the vertical centerline, the distance between the closest edges of the effective projected luminous lens area in front of the light sources must not be greater than 200 mm.

S10.17.1.2 *Two headlamps with both beams.*

S10.17.1.2.1 If the system consists of two headlamps, each of which provides both an upper and lower beam, the headlamps must be mounted either at the same height and symmetrically disposed about the vertical centerline or mounted on the vertical centerline.

S10.17.1.2.2 If the headlamps are horizontally disposed about the vertical centerline, the distance between the closest edges of their effective projected luminous lens areas must not be greater than 200 mm.

S10.17.1.3 *Two headlamps, upper beam and lower beam.*

S10.17.1.3.1 If the system consists of two headlamps, one of which provides an upper beam and one of which provides the lower beam, the headlamps must be located on the vertical centerline with the upper beam no higher than the lower beam, or horizontally disposed about the vertical centerline and mounted at the same height.

S10.17.1.3.2 If the headlamps are horizontally disposed about the vertical centerline, the distance between the closest edges of their effective projected luminous lens areas must not be greater than 200 mm.

S10.17.2 *Motorcycle replaceable bulb headlamp marking.* Each replaceable bulb headlamp that is designed to conform to S10.17(b) and that is equipped with a light source other than a replaceable light source meeting the requirements of S11, must have the word ''motorcycle'' permanently marked on the lens in characters not less than 3 mm in height.

S10.17.3 *Photometry.* Each motorcycle headlamp that is not designed to conform to S10.17(a), must be designed to conform to the photometry requirements of Table XX when tested according to the procedure of S14.2.5.

S10.17.4 *Physical tests.* Each motorcycle headlamp that is not designed to conform to S10.17(a) must be designed to conform to the performance requirements of the vibration test, moisture test, dust test, and corrosion test of S14.5, the out of focus test of S14.3, the color test of S14.4, and each motorcycle headlamp that does not incorporate a glass lens must be designed to conform to the performance requirements of the plastic optical materials test of S14.4.

S10.17.5 *Motorcycle headlamp modulation system.* A headlamp on a motorcycle may be activated to modulate either the upper beam or the lower beam from its maximum intensity to a lesser intensity, provided that:

S10.17.5.1 *Modulation.*

(a) The rate of modulation must be 240 ± 40 cycles per minute.

(b) The headlamp must be operated at maximum power for 50 to 70 percent of each cycle.

(c) The lowest intensity at any test point must be not less than 17 percent of the maximum intensity measured at the same point.

(d) The modulator switch must be wired in the power lead of the beam filament being modulated and not in the ground side of the circuit.

(e) Means must be provided so that both the lower beam and upper beam remain operable in the event of a modulator failure.

(f) The system must include a sensor mounted with the axis of its sensing element perpendicular to a horizontal plane. Headlamp modulation must cease whenever the level of light emitted by a tungsten filament light operating at 3000° Kelvin is either less than 270 lux of direct light for upward pointing sensors or less than 60 lux of reflected light for downward pointing sensors. The light is measured by a silicon cell type light meter that is located at the sensor and pointing in the same direction as the sensor. A Kodak Gray Card (Kodak R–27) is placed at ground level to simulate the road surface in testing downward pointing sensors.

(g) When tested in accordance with the test profile shown in Figure 9, the voltage drop across the modulator when the lamp is on at all test conditions for 12 volt systems and 6 volt systems must not be greater than 0.45 volt. The modulator must meet all the provisions of the standard after completion of the test profile shown in Figure 9.

(h) Means must be provided so that both the lower and upper beam function at design voltage when the headlamp control switch is in either the lower or upper beam position when the modulator is off.

S10.17.5.2 *Replacement modulators.* Each modulator not intended as original equipment, or its container, must be labeled with the maximum wattage, and the minimum wattage appropriate for its use.

S10.17.5.2.1 *Replacement performance.* Each modulator, not intended as original equipment, must comply with S10.17.5.1 (a) through (g) when connected to a headlamp of the maximum rated power and a headlamp of the minimum rated power, and must provide means so that the modulated beam functions at design voltage when the modulator is off.

S10.17.5.2.2 *Replacement instructions.* Instructions, with a diagram, must be provided for mounting the light sensor including location on the motorcycle, distance above the road surface, and orientation with respect to the light.

S10.18 *Headlamp aimability performance requirements.*

S10.18.1 *Headlamp mounting and aiming.* Except as provided in this paragraph, each headlamp must be installed on a motor vehicle with a mounting and aiming mechanism that permits aim inspection and adjustment of both vertical and horizontal aim, and is accessible for those purposes without removal of any vehicle parts, except for protective covers removable without the use of tools.

S10.18.1.1 The axis of the light beams must be adjustable to the left, right, up, or down from the designed setting, the amount of adjustability to be determined by practical operating conditions and the type of equipment.

S10.18.1.2 The adjustments must be conveniently made by one person with tools ordinarily available. When the headlamps are secured, the aim will not be disturbed under ordinary conditions of service.

S10.18.2 *Headlamp aiming systems.* When a headlamp system is installed on a motor vehicle, it must be aimable with at least one of the following: An externally applied aiming device, as specified in S10.18.7; an on-vehicle headlamp aiming device installed by the vehicle or lamp manufacturer, as specified in S10.18.8; or by visual/optical means, as specified in S10.18.9.

S10.18.3 *Aim adjustment interaction.* When installed on the vehicle, adjustment of one aim axis through its full on-vehicle range must not cause the aim of the other axis to deviate more than ± 0.76°. If the performance specified is not achievable, the requirements of S10.18.3.1 apply, except that if the aiming mechanism is not a VHAD, the requirements specific to VHADs are not applicable, and the instruction must be specific to the aiming mechanism installed.

S10.18.3.1 Should the mechanism not meet the requirements of S10.18.3, a cautionary label must be placed adjacent to the mechanism stating the caution and including either the reason for the caution or the corrective action necessary. Each such label must also refer the reader to the vehicle operator's manual for complete instructions. Each such vehicle must be equipped with an operator's manual containing the complete instructions appropriate for the mechanism installed.

S10.18.4 *Horizontal adjustment-visually aimed headlamp.* A visually/optically aimable headlamp that has a lower beam must not have a horizontal adjustment mechanism unless such mechanism meets the requirements of this standard for on vehicle aiming as specified in S10.18.8.

S10.18.5 *Optical axis marking.*

S10.18.5.1 *Optical axis marking-vehicle.* Each motor vehicle must be equipped with headlamps or beam contributors which have a mark or markings that are visible from the front of the headlamp when installed on the vehicle to identify the optical axis of the headlamp to assure proper horizontal and vertical alignment of the aiming screen or optical aiming equipment. The manufacturer is free to choose the design of the mark or markings. The mark or markings may be on the interior or exterior of the lens or indicated by a mark or central structure on the interior or exterior of the headlamp.

S10.18.5.2 *Optical axis marking-lamp.* Each headlamp or beam contributor that is not visually/optically aimable in accordance with S10.18.9 of this standard must be equipped with fiducial marks, aiming pads, or similar references of sufficient detail and accuracy, for determination of an appropriate vehicle plane to be used with the photometric procedures of S14.2.5 for correct alignment with the photometer axis when being tested for photometric compliance, and to serve for the aiming reference when the headlamp or beam contributor is installed on a motor vehicle. The fiducial marks, aiming pads, or similar references are protrusions, bubble vials, holes, indentations, ridges, scribed lines, or other readily identifiable marks established and described by the vehicle or headlamp manufacturer.

S10.18.5.3 *Optical axis marking-visual/optical aim headlamp.* There must be a mark or markings identifying the optical axis of the headlamp visible from the front of the headlamp when installed on the vehicle, to assure proper horizontal and vertical alignment of the aiming screen or optical aiming equipment with the headlamp being aimed. The manufacturer is free to choose the design of the mark or markings. The mark or markings may be on the interior or exterior of the lens or indicated by a mark or central structure on the interior or exterior of the headlamp.

S10.18.6 *Moveable reflectors.* Each headlamp aimed by moving the reflector relative to the lens and headlamp housing, or vice versa, must conform with the photometric requirements applicable to it when tested according to the procedure of S14.2.5 with the lens at any position relative to the reflector within the full range of vertical pitch on the vehicle on which the headlamp system is installed and a horizontal range of ± 2.5°. Additionally it must comply with the aiming adjustment requirements of S14.6.

S10.18.7 *External aiming.* Each headlighting system that is capable of being mechanically aimed by externally applied headlamp aiming devices must be mechanically aimable using the equipment specified in SAE J602 *Headlamp Aiming Device for Mechanically Aimable Sealed Beam Headlamp Units,* October 1980, (incorporated by reference, see 571.108 S5.2 of this title) without the removal of any ornamental trim rings, covers, wipers or other vehicle parts.

S10.18.7.1 *Headlamp aiming device locating plates.* Each headlighting system which is designed to use the Headlamp Aiming Device

Locating Plates with adjustable legs for the 100×165 mm unit and the 142×200 mm unit, and which has adjustable length legs, must meet the following requirements:

S10.18.7.1.1 The lens must have three aiming pads which meet the requirements of Figure 4, *Dimensional Specifications for Location of Aiming Pads on Replaceable Bulb Headlamp Units*. The aiming pads need not be centered at the geometric center of the lens, or on the optical axis. Except as provided in S10.18.7.1.2, a whole number, which represents the distance in tenths of an inch (i.e. 0.3 inch = 3) from the aiming reference plane to the respective aiming pads which are not in contact with that plane, must be inscribed adjacent to each respective aiming pad on the lens. The height of these numbers must be not less than .157 inch (4 mm). If there is interference between the plane and the area of the lens between the aiming pads, the whole number represents the distance to a secondary plane. The secondary plane must be located parallel to the aiming reference plane and as close to the lens as possible without causing interference.

S10.18.7.1.2 If the most forward aiming pad is the lower inboard aiming pad, then the dimensions may be placed anywhere on the lens. The dimension for the outboard aiming pad (Dimension F in Figure 4) must be followed by the letter ''H'' and the dimension for the center aiming pad must be followed by the letter ''V.'' The dimensions must be expressed in tenths of an inch.

S10.18.7.2 *Nonadjustable headlamp aiming device locating plates.* Each headlamp may be designed to use the nonadjustable Headlamp Aiming Device Locating Plate for the 100×165 mm unit, the 142×200 mm unit, the 146 mm diameter unit, or the 178 mm diameter unit of SAE J602 OCT80, *Headlamp Aiming Device for Mechanically Aimable Sealed Beam Headlamp Units*, (incorporated by reference, see 571.108 S5.2 of this title), or the 92×150 mm Type F unit, and incorporate lens-mounted aiming pads as specified for those units pursuant to appendix C of part 564 of this chapter. If so designed, no additional lens marking is necessary to designate the type of plate or dimensions.

S10.18.8 *On-vehicle aiming.* Each headlighting system that is capable of being aimed by equipment installed on the vehicle must include a Vehicle Headlamp Aiming Device (VHAD) that conforms to the following requirements:

S10.18.8.1 *Aim.* The VHAD must provide for headlamp aim inspection and adjustment in both the vertical and horizontal axes.

S10.18.8.1.1 *Vertical aim.* The VHAD must include the necessary references and scales relative to the horizontal plane to assure correct vertical aim for photometry and aiming purposes. An off vehicle measurement of the angle of the plane of the ground is permitted. In addition, an equal number of graduations from the ''0'' position representing angular changes in the axis in the upward and downward directions must be provided.

S10.18.8.1.1.1 Each graduation must represent a change in the vertical position of the mechanical axis not larger than 0.19° (1 in at 25 ft) to provide for variations in aim at least 1.2° above and below the horizontal, and have an accuracy relative to the zero mark of less than 0.1°.

S10.18.8.1.1.2 The VHAD must be marked to indicate headlamp aim movement in the upward and downward directions.

S10.18.8.1.1.3 Each graduation must indicate a linear movement of the scale indicator of not less than 0.05 in (1.27 mm) if a direct reading analog indicator is used. If a remote reading indicator is provided, it must represent the actual aim movement in a clear, understandable format.

S10.18.8.1.1.4 The vertical indicator must perform through a minimum range of ± 1.2°.

S10.18.8.1.1.5 Means must be provided in the VHAD for compensating for deviations in floor slope less than 1.2° from the horizontal that would affect the correct positioning of the headlamp for vertical aim.

S10.18.8.1.1.6 The graduations must be legible under an illumination level not greater than 30 foot candles, measured at the top of the graduation, by an observer having 20/20 vision (Snellen), and must permit aim adjustment to within 0.19° (1 in at 25 ft).

S10.18.8.1.2 *Horizontal aim.* The VHAD must include references and scales relative to the longitudinal axis of the vehicle necessary to assure correct horizontal aim for photometry and aiming purposes. An ''0'' mark must be used to indicate alignment of the headlamps relative to the longitudinal axis of the vehicle. In addition, an equal number of graduations from the ''0'' position representing equal angular changes in the axis relative to the vehicle axis must be provided.

S10.18.8.1.2.1 Each graduation must represent a change in the horizontal position of the mechanical axis not greater than 0.38° (2 in at 25 ft) to provide for variations in aim at least 0.76° (4 in at 25 ft) to the left and right of the longitudinal axis of the vehicle, and must have an accuracy relative to the zero mark of less than 0.1°.

S10.18.8.1.2.2 The VHAD must be marked to indicate headlamp aim movement in the left and right directions.

S10.18.8.1.2.3 The graduations must be legible under an illumination level not greater than 30 foot candles, measured at the top of the graduation, by an observer having 20/20 vision (Snellen), and must permit aim adjustment to within 0.38° (2 in at 25 ft).

S10.18.8.1.2.4 The horizontal indicator must perform through a minimum range of ± 0.76° (4 in at 25 ft); however, the indicator itself must be capable of recalibration over a

movement of ± 2.5° relative to the longitudinal axis of the vehicle to accommodate any adjustment necessary for recalibrating the indicator after vehicle repair from accident damage.

S10.18.8.2 *Aiming instructions.*

S10.18.8.2.1 The instructions for properly aiming the headlighting system using the VHAD must be provided on a label permanently affixed to the vehicle adjacent to the VHAD, or in the vehicle operator's manual. The instructions must advise that the headlighting system is properly aimed if the appropriate vertical plane (as defined by the vehicle manufacturer) is perpendicular to both the longitudinal axis of the vehicle, and a horizontal plane when the vehicle is on a horizontal surface, and the VHAD is set at ''0'' vertical and ''0'' horizontal.

S10.18.8.2.2 Should a remote indicator or a remote indicator and adjuster be provided, the instructions must be placed in the operator's manual, and may also be placed on a label adjacent to the VHAD.

S10.18.8.3 *Permanent calibration.* Each headlamp equipped with a VHAD must be manufactured with its calibration permanently fixed by its manufacturer. Calibration in this case means the process of accurately aligning the geometry of the VHAD devices with the beam pattern for the purposes of compliance with the standard.

S10.18.8.4 *Replacement units.* When tested according to the procedure of S14.2.5 with any replacement headlamp unit(s) or light sources intended for use in the system under test, the VHAD and headlighting system must be designed to conform to the photometric performance requirements applicable for the system under test.

S10.18.8.5 *Physical tests.* Each VHAD must be designed to conform with the performance requirements of S14.8.

S10.18.9 *Visual/optical aiming.* Each visually/optically aimable headlamp must be designed to conform to the following requirements:

S10.18.9.1 *Vertical aim, lower beam.* Each lower beam headlamp must have a cutoff in the beam pattern. It may be either on the left side or the right side of the optical axis, but once chosen for a particular headlamp system's design, the side chosen for the cutoff must not be changed for any headlamps intended to be used as replacements for those system's headlamps.

S10.18.9.1.1 *Vertical position of the cutoff.* The headlamp must be aimed vertically so that the cutoff is on the left side, at 0.4° down from the H–H line, or on the right side, at the H–H line.

S10.18.9.1.2 *Vertical gradient.* The gradient of the cutoff measured at either 2.5° L or 2.0° R must be not less than 0.13 based on the procedure of S10.18.9.1.5.

S10.18.9.1.3 *Horizontal position of the cutoff.* The width must be not less than 2°, with not less than 2° of its actual width centered at either 2.5° L, or 2.0° R.

S10.18.9.1.4 *Maximum inclination of the cutoff.* The vertical location of the highest gradient at the ends of the minimum width must be within ± 0.2° of the vertical location of the maximum gradient measured at the appropriate vertical line (at either 2.5° L for a left side cutoff, or 2.0° R for a right side cutoff).

S10.18.9.1.5 *Measuring the cutoff parameter.*

S10.18.9.1.5.1 The headlamp is mounted on a headlamp test fixture which simulates its actual design location on any vehicle for which the headlamp is intended. The fixture, with the headlamp installed, is attached to the goniometer table in such a way that the fixture alignment axes are coincident with the goniometer axes. The headlamp is energized at the specified test voltage. The cutoff parameter must be measured at a distance of 10 m from a photosensor with a 10 mm diameter.

S10.18.9.1.5.2 The headlamp beam pattern is aimed with the cutoff at the H–H axis. There is no adjustment, shimming, or modification of the horizontal axis of the headlamp or test fixture, unless the headlamp is equipped with a VHAD. In this case the VHAD is adjusted to zero.

S10.18.9.1.5.3 A vertical scan of the beam pattern is conducted for a headlamp with a left side gradient by aligning the goniometer on a vertical line at 2.5° L and scanning from 1.5° U to 1.5° D. For a headlamp with a right side gradient, a vertical scan of the beam pattern is conducted by aligning the goniometer on a vertical line at 2.0° R and scanning from 1.5° U to 1.5° D.

S10.18.9.1.5.4 Determine the maximum gradient within the range of the scan by using the formula: $G = \log E(a) - \log E(a + 0.1)$, where ''G'' is the gradient, ''E'' is illumination and ''a'' is vertical angular position. The maximum value of the gradient ''G'' determines the vertical angular location of the cutoff. Perform vertical scans at 1.0° L and R of the measurement point of the maximum gradient to determine the inclination.

S10.18.9.2 *Horizontal aim, lower beam.* There is no adjustment of horizontal aim unless the headlamp is equipped with a horizontal VHAD. If the headlamp has a VHAD, it is set to zero.

S10.18.9.3 *Vertical aim, upper beam.*

S10.18.9.3.1 If the upper beam is combined in a headlamp with a lower beam, the vertical aim of the upper beam must not be changed from the aim set using the procedures of S10.18.9.1 and S10.18.9.2 used for the lower beam.

S10.18.9.3.2 If the upper beam is not combined in a headlamp with a lower beam, the vertical aim of the upper beam is adjusted so that the maximum beam intensity is located on the H–H axis.

S10.18.9.4 *Horizontal aim, upper beam.*

S10.18.9.4.1 If the upper beam is combined in a headlamp with a lower beam, the horizontal aim of the upper beam must not be changed from the aim set using the procedures of S10.18.9.1 and S10.18.9.2 used for the lower beam.

S10.18.9.4.2 If the upper beam is not combined in a headlamp with the lower beam and has fixed horizontal aim or has a horizontal VHAD, then the headlamp is mounted on a headlamp test fixture which simulates its actual design location on any vehicle for which the headlamp is intended. The fixture, with the headlamp installed, is attached to the goniometer table in such a way that the fixture alignment axes are coincident with the goniometer axes. The headlamp must be energized at 12.8 ± 0.20 mV. There is no adjustment, shimming, or modification of the horizontal axis of the headlamp or test fixture, unless the headlamp is equipped with a VHAD. In this case the VHAD is adjusted to zero.

S10.18.9.4.3 If the upper beam is not combined in a headlamp with a lower beam, and it does not have a VHAD, the horizontal aim of the upper beam is adjusted so that the maximum beam intensity is located on the V–V axis.

S10.18.9.5 *Photometry*. When tested according to the procedure of S14.2.5, a visually/optically aimable headlamp must be designed to conform to the lower beam requirements of columns; LB1V or LB2V of Table XIX–a, or LB3V of Table XIX–b, or LB4V of Table XIX–c.

S10.18.9.6 *Visual/optical aiming identification marking*. Each letter used in marking according to this paragraph must be not less than 3 mm high.

S10.18.9.6.1 The lens of a lower beam headlamp must be marked ''VOL'' if the headlamp is intended to be visually/optically aimed using the left side of the lower beam pattern. The lens of a lower beam headlamp must be marked ''VOR'' if the headlamp is intended to be visually/optically aimed using the right side of the lower beam pattern. The lens of a headlamp that is solely an upper beam headlamp and intended to be visually/optically aimed using the upper beam must be marked ''VO''.

S10.18.9.6.2 The lens of each sealed beam or integral beam headlamp must be marked ''VOR'' if the headlamp is of a type that was manufactured before May 1, 1997, and if such headlamp type has been redesigned since then to be visually/optically aimable.

S11 *Replaceable light source requirements*. Each replaceable light source must be designed to conform to the dimensions and electrical specifications furnished with respect to it pursuant to part 564 of this chapter, on file in Docket No. NHTSA 98–3397, and must conform to the following requirements:

S11.1 *Markings*. If other than an HB Type, the light source must be marked with the bulb marking designation specified for it in compliance with appendix A or appendix B of part 564 of this chapter. The base of each HB Type must be marked with its HB Type designation. Each replaceable light source must also be marked with the symbol DOT and with a name or trademark in accordance with S6.5.

S11.2 *Ballast markings*. If a ballast is required for operation, each ballast must bear the following permanent markings:

(a) Name or logo of ballast manufacturer;

(b) Ballast part number or unique identification;

(c) Part number or other unique identification of the light source for which the ballast is designed;

(d) Rated laboratory life of the light source/ballast combination, if the information for the light source has been filed in appendix B of part 564 of this chapter;

(e) A warning that ballast output voltage presents the potential for severe electrical shock that could lead to permanent injury or death;

(f) Ballast output power in watts and output voltage in rms volts AC or DC; and

(g) The symbol 'DOT''.

S11.3 *Gas discharge laboratory life*. For light sources that use excited gas mixtures as a filament or discharge arc, the ''rated laboratory life'' is determined in accordance with sections 4.3 and 4.9 of SAE Recommended Practice J2009 FEB93, Forward Discharge Lighting Systems (incorporated by reference, see 571.108 S5.2 of this title).

S11.4 *Physical tests*.

S11.4.1 Each replaceable light source must be designed to conform with the performance requirements of the deflection test and pressure test requirements of S14.7.

S11.4.2 Replaceable light sources must be designed to conform with the requirements of section VII of appendix A of part 564 of this chapter, or section IV of appendix B of part 564 of this chapter, for maximum power and luminous flux when test by the procedure of S14.7.3.

S12 *Headlamp concealment device requirements*.

S12.1 While the headlamp is illuminated, its fully opened headlamp concealment device must remain fully opened should any loss of power to or within the headlamp concealment device occur.

S12.2 Whenever any malfunction occurs in a component that controls or conducts power for the actuation of the concealment device, each closed headlamp concealment device must be capable of being fully opened by a means not requiring the use of any tools. Thereafter, the headlamp concealment device must remain fully opened until intentionally closed.

S12.3 Except for malfunctions covered by S12.2, each headlamp concealment device must be capable of being fully opened and

the headlamps illuminated by actuation of a single switch, lever, or similar mechanism, including a mechanism that is automatically actuated by a change in ambient light conditions.

S12.4 Each headlamp concealment device must be installed so that the headlamp may be mounted, aimed, and adjusted without removing any component of the device, other than components of the headlamp assembly.

S12.5 Except for cases of malfunction covered by S12.2, each headlamp concealment device must, within an ambient temperature range of −20 °F to +120 °F, be capable of being fully opened in not more than 3 seconds after the actuation of a driver-operated control.

S12.6 As an alternative to complying with the requirements of S12.1 through S12.5, a vehicle with headlamps incorporating VHAD or visual/optical aiming in accordance with this standard may meet the requirements for *Concealable lamps* in paragraph 5.14 of the following version of the Economic Commission for Europe Regulation 48 ''Uniform Provisions Concerning the Approval of Vehicles With Regard to the Installation of Lighting and Light-Signaling Devices'': E/ECE/324–E/ECE/ TRANS/505, Rev.1/Add.47/Rev.1/Corr.2, 26 February 1996 (page 17) (incorporated by reference, see 571.108 S5.2 of this title), in the English language version.

S12.7 *Certification election.* Manufacturers of vehicles with headlamps incorporating VHAD or visual/optical aiming must elect to certify to S12.1 through S12.5 or to S12.6 prior to, or at the time of certification of the vehicle, pursuant to 49 CFR Part 567. The selection is irrevocable.

S13 *Replaceable headlamp lens requirements.*

S13.1 A replacement lens for a replaceable bulb headlamp or integral beam headlamp that is not required to have a bonded lens must be provided with a replacement seal in a package that includes instructions for the removal and replacement of the lens, the cleaning of the reflector, and the sealing of the replacement lens to the reflector assembly.

S13.2 Each replacement headlamp lens with seal, when installed according to the lens manufacturer's instructions on an integral beam or replaceable bulb headlamp, must not cause the headlamp to fail to comply with any of the requirements of this standard.

S13.3 Each replacement headlamp lens must be marked with the symbol ''DOT'' either horizontally or vertically, to constitute certification. Each replacement headlamp lens must also be marked with manufacturer and the part or trade number of the headlamp for which it is intended, and with the name and/or trademark of the lens manufacturer or importer that is registered with the U.S. Patent and Trademark Office. Nothing in this standard authorizes the marking of any such name and/or trademark by one who is not the owner, unless the owner has consented to it.

S14 *Physical and photometry test procedures and performance requirements.*

S14.1 *General test procedures and performance requirements.*

S14.1.1 Each lamp, reflective device, item of conspicuity treatment, and item of associated equipment required or permitted by this standard must be designed to conform to all applicable physical test performance requirements specified for it.

S14.1.2 *Plastic optical materials.* All plastic materials used for optical parts such as lenses and reflectors on lamps or reflective devices required or allowed by this standard must conform to the material test requirements of S14.4.2.

S14.1.3 All coatings used on optical materials must have added to their formulations an optical brightener, whose presence is detectable by ultraviolet light, to aid in testing for their presence. Other equivalent industry accepted methods may be used as an alternative.

S14.1.4 *Samples.*

S14.1.4.1 Samples submitted for laboratory test must be new, unused, manufactured from production tooling and assembled by production processes, and representative of the devices as regularly manufactured and marketed.

S14.1.4.2 Each test sample must include not only the device but also accessory equipment necessary to operate in its intended manner. Where necessary a mounting bracket shall be provided so that the device may be rigidly bolted in its operating position on the various test equipment.

S14.1.4.3 Dust and photometric tests may be made on a second set of mounted samples, if desired, to expedite completion of the tests.

S14.1.5 *Laboratory facilities.* The laboratory must be equipped to test the sample in accordance with the requirements of the specific device.

S14.2 *Photometric test procedures.* Each lamp and reflective device required or permitted by this standard must be designed to conform to the applicable photometric requirements.

S14.2.1 *Photometry measurements for all lamps except license plate lamps, headlamps, and DRLs.*

S14.2.1.1 *Mounting.* Photometry measurements are made with the sample lamp mounted in its normal operating position.

S14.2.1.2 *School bus signal lamp aiming.* A school bus signal lamp must be aimed with its aiming plane normal to the photometer axis and may be reaimed for photometry by ± ½° vertically and ± 1° horizontally.

S14.2.1.3 *Measurement distance.* Photometric measurements are made at a distance between the light source and the point of

measurement of at least 1.2 m for side marker lamps, clearance lamps, identification lamps, and parking lamps, and at least 3 m for turn signal lamps, stop lamps, taillamps, backup lamps, and school bus signal lamps.

S14.2.1.4 *Location of test points.* Test point location must comply with the following nomenclature:

(a) The line formed by the intersection of a vertical plane through the light source of the lamp and normal to the test screen is designated ''V''.

(b) The line formed by the intersection of a horizontal plane through the light source and normal to the test screen is designated ''H''.

(c) The point of intersection of these two lines is designated ''H-V''.

(d) Other test points on the test screen are measured in terms of angles from the H and V lines.

(e) Angles to the right (R) and to the left (L) are regarded as being to the right and left of the V line when the observer stands behind the lamp and looks in the direction of its light beam when it is properly aimed for photometry. Similarly, the upward angles designated as U and the downward angles designated as D, refer to light directed at angles above and below the H line, respectively.

S14.2.1.5 *Multiple compartment and multiple lamp photometry of turn signal lamps, stop lamps, and taillamps.*

S14.2.1.5.1 When compartments of lamps or arrangements of multiple lamps are photometered together, the H–V axis intersects the midpoint between the optical axes.

S14.2.1.5.2 Luminous intensity measurements of multiple compartment lamp or multiple lamp arrangements are made either by:

(a) Measuring all compartments together, provided that a line from the optical axis of each compartment or lamp to the center of the photometer sensing device does not make an angle more than 0.6° with the H–V axis, or

(b) Measuring each compartment or lamp separately by aligning its optical axis with the photometer and adding the value at each test point.

S14.2.1.5.3 Multiple compartment turn signal lamps or stop lamps or multiple lamp arrangements of these lamps installed on multipurpose passenger vehicles, trucks, trailers, or buses 2032 mm or more in overall width must use the method of S14.2.1.5.2(b) only.

S14.2.1.6 *Bulbs.* Except for a lamp having a sealed-in bulb, a lamp must meet the applicable requirements of this standard when tested with a bulb whose filament is positioned within ± .010 in of the nominal design position specified in SAE J573d, *Lamp Bulbs and Sealed Units,* December 1968, (incorporated by reference, see 571.108 S5.2 of this title) or specified by the bulb manufacturer and operated at the bulb's rated mean spherical candela.

S14.2.1.6.1 Each lamp designed to use a type of bulb that has not been assigned a mean spherical candela rating by its manufacturer and is not listed in SAE J573d, *Lamp Bulbs and Sealed Units,* December 1968 (incorporated by reference, see 571.108 S5.2 of this title), must meet the applicable requirements of this standard when used with any bulb of the type specified by the lamp manufacturer, operated at the bulb's design voltage. A lamp that contains a sealed-in bulb must meet these requirements with the bulb operated at the bulb's design voltage.

S14.2.1.6.2 A bulb that is not listed in SAE J573d, *Lamp Bulbs and Sealed Units,* December 1968, (incorporated by reference, see 571.108 S5.2 of this title) is not required to use a socket that conforms to the requirements of SAE J567b, *Bulb Sockets,* April 1964 (incorporated by reference, see 571.108 S5.2 of this title).

S14.2.2 *License plate lamp photometry.* Photometry compliance of license plate lamps is determined by measurement of the illumination falling upon test stations located on a test plate.

S14.2.2.1 *Illumination surface.* All illumination measurements are made on a rectangular test plate of clean, white blotting paper mounted on the license plate holder in the position normally taken by the license plate. The face of the test plate must be 1.5 mm from the face of the license plate holder.

S14.2.2.2 *Test stations.* Test stations must be located on the face of the test plate as shown in Figure 19 according to the type of vehicle on which the license plate lamps are installed.

S14.2.2.3 Bulb requirements of S14.2.1.6 apply to license plate lamp photometry.

S14.2.3 *Reflex reflector and retroreflective sheeting photometry.*

S14.2.3.1 *Mounting.* Each reflex reflector is mounted for photometry with the center of the reflex area at the center of goniometer rotation and at the same horizontal level as the source of illumination.

S14.2.3.2 *Illumination source.* The source of illumination is a lamp with a 50 mm effective diameter and with a filament operating at 2856 °K.

S14.2.3.3 *Measurement distance.* The test distance is 30.5 m [100ft].

S14.2.3.4 *Test setup* The observation point is located directly above the source of illumination. The H–V axis of reflex reflectors is taken as parallel to the longitudinal axis of the vehicle for rear reflectors and perpendicular to a vertical plane passing through the longitudinal axis of the vehicle for side reflectors.

S14.2.3.5 *Photodetector.* The photodetector has an opening of not more than 13 mm vertically and 25 mm horizontally.

S14.2.3.6 *Photometry surface.* Reflex reflectors may have any linear or area dimensions but must have no more than 7740 sq mm projected area contained within a 254 mm diameter circle exposed for photometry.

S14.2.3.7 *Procedure.* Photometric measurements of reflex reflectors and retroreflective sheeting must be made at various observation and entrance angles as shown in Table XVI.

S14.2.3.7.1 The observation angle is the angle formed by a line from the observation point to the center of the reflector and a second line from the center of the reflector to the source of illumination.

S14.2.3.7.2 The entrance angle is the angle between the axis of the reflex reflector and a line from the center of the reflector to the source of illumination.

S14.2.3.7.3 The entrance angle is designated left, right, up, and down in accordance with the position of the source of illumination with respect to the axis of the reflex reflector as viewed from behind the reflector.

S14.2.3.7.4 Measurements are made of the luminous intensity which the reflex reflector is projecting toward the observation point and the illumination on the reflex reflector from the source of illumination.

S14.2.3.8 *Measurements.*

S14.2.3.8.1 *Reflex reflectors.* The required measurement for reflex reflectors at each test point as shown in Table XVI is the quotient of the projected luminous intensity divided by the illumination expressed as millicandela per lux or candela per footcandle.

S14.2.3.8.2 *Retroreflective sheeting.* The required measurement for retroreflective sheeting reflectors at each test point as shown in Table XVI is candela per lux per square meter of area.

S14.2.3.8.3 *Reflex reflector photometry measurement adjustments.*

S14.2.3.8.3.1 Reflex reflectors, which do not have a fixed rotational position on the vehicle, are rotated about their axis through 360° to find the minimum photometric value which must be reported for each test point. If the output falls below the minimum requirement at any test point, the reflector is rotated ±5° about its axis from the angle where the minimum output occurred, and the maximum value within this angle is reported as a tolerance value.

S14.2.3.8.3.2 Reflex reflectors, which by their design or construction, permit mounting on a vehicle in a fixed rotational position, are tested in this position. A visual locator, such as the word TOP is not considered adequate to establish a fixed rotational position on the vehicle.

S14.2.3.8.3.3 If uncolored reflections from the front surface interfere with photometric readings at any test point, additional readings are taken 1° above, below, right, and left of the test point, and the lowest of these readings and its location is reported provided the minimum test point requirement for the test point is met.

S14.2.4 *Daytime running lamp (DRL) photometry measurements.*

S14.2.4.1 Each DRL is tested to the procedure of S14.2.5 when a test voltage of 12.8 v ± 20 mv is applied to the input terminals of the lamp switch module or voltage-reducing equipment, whichever is closer to the electrical source on the vehicle.

S14.2.4.2 The test distance from the lamp to the photometer is not less than 18.3 m if the lamp is optically combined with a headlamp, or is a separate lamp, and not less than 3 m if the lamp is optically combined with a lamp, other than a headlamp, that is required by this standard.

S14.2.4.3 Bulb requirements of S14.2.1.6 apply to DRL photometry.

S14.2.5 *Headlamp photometry measurements.*

S14.2.5.1 *Mounting.* Photometry measurements at the applicable test points are made with the sample headlamp mounted in its normal operating position.

S14.2.5.2 Test points in the area from 10° U to 90° U must be measured from the normally exposed surface of the lens face.

S14.2.5.3 *Measurement distance.* Photometric measurements are made at a distance between the light source and the photometer sensor of at least 18.3 m.

S14.2.5.4 *Seasoning and test voltage.* All sealed beam headlamps, integral beam headlamps, beam contributors, and replaceable light sources are seasoned at design voltage for 1% of its average design life or 10 hours, whichever is less prior to a photometry test. A headlamp is tested at 12.8 v. ± 20 mv, D.C. as measured at the terminals of the lamp.

S14.2.5.5 *Aiming.* Each headlamp is aimed prior to a photometry test in accordance with the procedure appropriate to its aiming system. A ¼° reaim is permitted in any direction at any test point to allow for variations in readings between laboratories for all headlamps except a Type F upper beam unit not equipped with a VHAD.

S14.2.5.5.1 *Mechanically aimable headlamps using an external aimer.* The headlamp is aimed mechanically with the aiming plane at the design angle(s) to the photometer axis and the mechanical axis of the headlamp on the photometer axis.

S14.2.5.5.2 *Mechanically aimable headlamps equipped with a VHAD.* The headlamp is aimed mechanically using the VHAD in accordance with the manufacturer's instructions as provided with the vehicle on which the headlamp is intended to be used.

S14.2.5.5.3 *Visually aimable lower beam headlamps-vertical aim.*

S14.2.5.5.3.1 A VOL cutoff headlamp must have the location of the cutoff maximum gradient, as determined by the method of

this standard, positioned at 0.4° down from the H–H line.

S14.2.5.5.3.2 A VOR cutoff headlamp must have the location of the cutoff maximum gradient, as determined by the method of this standard, positioned at the H–H line.

S14.2.5.5.4 *Visually aimable lower beam headlamps-horizontal aim.* There must be no adjustment of horizontal aim unless the headlamp is equipped with a horizontal VHAD. If the headlamp has a VHAD, it must be set to zero.

S14.2.5.5.5 *Visually aimable upper beam headlamps-vertical aim.*

S14.2.5.5.5.1 A headlamp whose upper beam is combined with a lower beam must not have its vertical aim changed from that set for the lower beam.

S14.2.5.5.5.2 A headlamp whose upper beam is not combined with a lower beam must have its maximum beam intensity positioned on the H–H axis.

S14.2.5.5.6 *Visually aimable upper beam headlamps-horizontal aim.*

S14.2.5.5.6.1 A headlamp whose upper beam is combined with a lower beam must not have its horizontal aim changed from that set for the lower beam.

S14.2.5.5.6.2 A headlamp whose upper beam is not combined with a lower beam and has a fixed horizontal aim or has a horizontal VHAD must be mounted in its normal operating position on a goniometer such that the mounting fixture alignment axes are coincident with the goniometer axes and must be energized at 12.8 v ± 20 mv. There must be no adjustment, shimming, or modification of the horizontal axis of the headlamp or test fixture, unless the headlamp is equipped with a VHAD, in which case the VHAD must be adjusted to zero.

S14.2.5.5.6.3 A headlamp whose upper beam is not combined with a lower beam and is not equipped with a horizontal VHAD, the horizontal aim must be adjusted so that the maximum beam intensity is positioned on the V–V axis.

S14.2.5.5.7 *Simultaneous aim Type F sealed beam headlamps and beam contributor integral beam headlamps.*

S14.2.5.5.7.1 A headlamp system permitted to use simultaneous aim of lower beams and upper beams must be aimed mechanically for lower beam photometry by centering the lower beam unit or the geometric center of all lower beam contributors on the photometer axis and aligning the aiming plane, aiming reference plane, or other appropriate vertical plane defined by the manufacturer perpendicular to the photometer axis.

S14.2.5.5.7.2 The headlamp must be aimed for upper beam photometry by moving the assembly in a plane parallel to the established lower beam aiming plane until the upper beam unit or the geometric center of all upper beam contributors is centered in the photometric axis.

S14.2.5.5.8 *Motorcycle headlamp-upper beam headlamps designed to comply with Table XX.* The upper beam of a multiple beam headlamp designed to comply with the requirements of Table XX must be aimed photoelectrically so that the center of the zone of highest intensity falls 0.4° vertically below the lamp axis and is centered laterally. The center of the zone of highest intensity must be established by the intersection of a horizontal plane passing through the point of maximum intensity, and the vertical plane established by balancing the photometric values at 3°L and 3°R.

S14.2.5.5.9 *Motorcycle headlamp-lower beam headlamps designed to comply with Table XX.* The beam from a single beam headlamp designed to comply with the requirements of Table XX must be aimed straight ahead with the top of the beam aimed vertically to obtain 2000 cd at H–V.

S14.2.5.6 *Positioner.* The goniometer configuration, used to position the sample headlamp when making photometric measurements at specific angular test points, is horizontal rotation over elevation. The vertical axis of the goniometer must correspond to the design position vertical axis of the sample headlamp which is vertical and perpendicular to the longitudinal axis of the vehicle.

S14.2.5.7 *Photometer.*

S14.2.5.7.1 The photometer must be capable of measuring the luminous intensity of the sample headlamp throughout its illumination range.

S14.2.5.7.2 *Sensor.*

S14.2.5.7.2.1 The maximum effective area of the photometric sensor must fit within a circle whose diameter is equal to 0.009 times the actual test distance from the light source of the sample headlamp to the sensor.

S14.2.5.7.2.2 The sensor effective area is defined as the actual area of intercepted light striking the detector surface of the photometer. Sensor systems incorporating lens(es) that change the diameter of the intercepted light beam before it reaches the actual detector surface, the maximum size requirements must apply to the total area of the light actually intercepted by the lens surface.

S14.2.5.7.2.3 The sensor must be capable of intercepting all direct illumination from the largest illuminated dimension of the sample lamp at the test distance.

S14.2.5.7.3 The color response of the photometer must be corrected to that of the 1931 International Commission on Illumination (C.I.E.) Standard Observer (2-degree) Photopic Response Curve, as shown in the *C.I.E. 1931 Chromaticity Diagram* (incorporated by reference, see 571.108 S5.2 of this title).

S14.2.5.8 *Location of test points.*

S14.2.5.8.1 Test point positions are defined by the positioner. The following nomenclature applies:

S14.2.5.8.1.1 The letters ''V'' and ''H'' designate the vertical and horizontal planes intersecting both the headlamp light source and the photometer axis. ''H–V'' designates the zero test point angle at the intersection of the H and V planes. This intersection is parallel to the longitudinal axis of the vehicle.

S14.2.5.8.1.2 The letters ''U'', ''D'', ''L'', and ''R'', indicating up, down, left and right, respectively, designate the angular position from the H and V planes to the photometer as viewed from the headlamp.

S14.2.5.8.1.3 Horizontal angles designated L and R are defined as the plan view angle between the vertical plane and the projection of the light ray from the headlamp onto the horizontal plane.

S14.2.5.8.1.4 Vertical angles designated U and D are defined as the true angle between the horizontal plane and the light ray from the headlamp.

S14.2.5.9 *Beam contributor photometry measurements.* In a headlighting system where there is more than one beam contributor providing a lower beam, and/or more than one beam contributor providing an upper beam, each beam contributor must be designed to meet only the applicable photometric performance requirements based upon the following mathematical expression: conforming test point value = 2(test point value)/total number of lower or upper beam contributors for the vehicle, as appropriate.

S14.2.5.10 *Moveable reflector aimed headlamp photometry measurements.*

S14.2.5.10.1 A headlamp aimed by moving the reflector relative to the lens and headlamp housing, or vice versa, must conform to the photometry requirements applicable to it with the lens at any position relative to the reflector.

S14.2.5.10.2 These positions include not less than the full range of vertical pitch of the vehicle on which the headlamp is installed and not less than ± 2.5° from the nominal horizontal aim position for the vehicle on which the headlamp is installed unless the headlamp is visually/optically aimed with a fixed horizontal aim.

S14.3 *Motorcycle headlamp out of focus test procedure and performance requirements.*

S14.3.1 *Procedure.* The sample device must be tested for photometry using bulbs having each of four out-of-focus filament positions. Where conventional bulbs with two pin bayonet bases are used, tests must be made with the light source 0.060 in above, below, ahead, and behind the designated position. If prefocused bulbs are used, the limiting positions at which tests are made must be 0.020 in above, below, ahead, and behind the designated position. The sample device may be re-aimed for each of the out-of-focus positions of the light source.

S14.3.2 *Performance requirements.* The minimum photometric values for the out-of-design position must be 80% of the in-design position.

S14.4 *General test procedures and performance requirements.*

S14.4.1 *Color test.* The requirement applies to the overall effective color of light emitted by the device and not to the color of the light from a small area of the lens. It does not apply to any pilot, indicator, or tell-tale lights. The color of the sample device must comply when tested by either the Visual Method or the Tristimulus Method.

S14.4.1.1 *Samples.* A test sample for a reflex reflector may be either the reflex reflector or a disc of the same material, technique of fabrication, and dye formulation as the reflex reflector. If a disc is used, the thickness must be twice the thickness of the reflector as measured from the face of the lens to the apexes of the reflecting elements.

S14.4.1.2 *General procedure.*

S14.4.1.2.1 The device must be operated at design voltage.

S14.4.1.2.2 Components (bulbs, caps, lenses, and the like) must be tested in a fixture or manner simulating the intended application.

S14.4.1.2.3 The lamp shall be allowed to reach operating temperature before measurements are made.

S14.4.1.2.4 The entire light emitting surface of the sample must be visible from any point on the entrance window of the test instrument.

S14.4.1.2.5 The distance between the test instrument and the sample must be large enough so that further increases in distance will not affect the results.

S14.4.1.3 *Visual method.*

S14.4.1.3.1 *Visual method procedure.* The color of light from the sample device must be compared visually with the color of the light from a standard. The standard may consist of a filter or limit glass. In the case of white, CIE Source A is used only as a color reference. The chromaticity coordinates of the color standards must be as close as possible to the limits listed. The color of the standard filters is determined spectrophotometrically.

S14.4.1.3.2 *Visual method performance requirements.* The color must comply with the applicable requirement.

S14.4.1.3.2.1 *Red.* Red is not acceptable if it is less saturated (paler), yellower, or bluer than the limit standards.

S14.4.1.3.2.2 *Yellow (Amber).* Yellow is not acceptable if it is less saturated (paler), greener, or redder than the limit standards.

S14.4.1.3.2.3 *White.* White is not acceptable if its color differs materially from that of CIE Source A.

S14.4.1.4 *Tristimulus method.*

S14.4.1.4.1 *Tristimulus method procedure.*

S14.4.1.4.1.1 The color of light from the H–V point of a sample device must be measured by photoelectric receivers with spectral responses that approximate CIE standard spectral tristimulus valves.

S14.4.1.4.1.2 A sphere may be used to integrate light from a colored source provided that the color shift that results from the spectral selectivity of the sphere paint be corrected by the use of a filter, correction factor, or an appropriate calibration.

S14.4.1.4.1.3 Where the sample device does not have uniform spectral characteristics in all useful directions, color measurements must be made at as many directions of view as are required to evaluate the color for those directions that apply to the end use of the device.

S14.4.1.4.2 *Tristimulus method performance requirements.* The color must comply with the applicable requirement.

S14.4.1.4.2.1 *Red.* The color of light emitted must fall within the following boundaries:

$y = 0.33$ (yellow boundary)
$y = 0.98 - x$ (purple boundary)

S14.4.1.4.2.2 *Yellow (Amber).* The color of light emitted must fall within the following boundaries:

$y = 0.39$ (red boundary)
$y = 0.79 - 0.67x$ (white boundary)
$y = x - 0.12$ (green boundary)

S14.4.1.4.2.3 *White (achromatic).* The color of light emitted must fall within the following boundaries:

$x = 0.31$ (blue boundary)
$y = 0.44$ (green boundary)
$x = 0.50$ (yellow boundary)
$y = 0.15 + 0.64x$ (green boundary)
$y = 0.38$ (red boundary)
$y = 0.05 + 0.75x$ (purple boundary)

S14.4.2 *Plastic optical materials tests.* Accelerated weathering procedures are not permitted.

S14.4.2.1 *Samples.*

S14.4.2.1.1 Samples of materials shall be injection molded into polished metal molds to produce test specimens with two flat and parallel faces. Alternative techniques may be used to produce equivalent specimens.

S14.4.2.1.2 Test specimens shape may vary, but each exposed surface must contain a minimum uninterrupted area of 32 sq cm.

S14.4.2.1.3 Samples must be furnished in thicknesses of 1.6 ± 0.25 mm, 2.3 ± 0.25 mm, 3.2 ± 0.25 mm, and 6.4 ± 0.25 mm.

S14.4.2.1.4 All samples must conform to the applicable color test requirement of this standard prior to testing.

S14.4.2.1.5 A control sample, kept properly protected from influences which may change its appearance and properties of each thickness, must be retained.

S14.4.2.2 *Outdoor exposure test.*

S14.4.2.2.1 Outdoor exposure tests of 3 years in duration must be made on samples of all materials, including coated and uncoated versions, used for optical parts of devices covered by this standard. Tests are to be conducted in Florida and Arizona.

S14.4.2.2.2 Concentrations of polymer components and additives used in plastic materials may be changed without outdoor exposure testing provided the changes are within the limits of composition represented by higher and lower concentrations of these polymer components and additives previously tested to this section and found to meet its requirements.

S14.4.2.2.3 *Procedure.*

S14.4.2.2.3.1 One sample of each thickness of each material must be mounted at each exposure site so that at least a minimum uninterrupted area of 32 sq cm of the exposed upper surface of the sample is at an angle of 45° to the horizontal facing south. The sample must be mounted in the open no closer than 30 cm (11.8 in) to its background.

S14.4.2.2.3.2 During the exposure time the samples must be cleaned once every three months by washing with mild soap or detergent and water, and then rinsing with distilled water. Rubbing must be avoided.

S14.4.2.2.4 *Performance requirements.* Plastic lenses, other than those incorporating reflex reflectors, used for inner lenses or those covered by another material and not exposed directly to sunlight must meet the optical material test requirements when covered by the outer lens or other material.

S14.4.2.2.4.1 After completion of the outdoor exposure test the haze and loss of surface luster as measured by ASTM 1003–92, *Haze and Luminous Transmittance of Transparent Plastic,* (incorporated by reference, see 571.108 S5.2 of this title) must not be greater than:

(a) 30% for materials used for outer lenses, other than those incorporating reflex reflectors;

(b) 7% for materials used for reflex reflectors and lenses used in front of reflex reflectors.

S14.4.2.2.4.2 After completion of the outdoor exposure test materials used for headlamp lenses must show no deterioration.

S14.4.2.2.4.3 After completion of the outdoor exposure test all materials, when compared with the unexposed control samples, must not show physical changes affecting performance such as color bleeding, delamination, crazing, or cracking. Additionally materials used for reflex reflectors and lenses used in front of reflex reflectors must not show surface deterioration or dimensional changes.

S14.4.2.2.4.4 After completion of the outdoor exposure test all materials, when compared with the unexposed control samples, must not have their luminous transmittance

changed by more than 25% when tested in accordance with ASTM E 308–66 (1973), *Spectrophotmetry and Description of Color in CIE 1931 System* (incorporated by reference, see 571.108 S5.2 of this title) using CIE Illuminant A (2856K).

S14.4.2.2.4.5 After completion of the outdoor exposure test all materials must conform to the color test of this standard in the range of thickness stated by the material manufacturer.

S14.4.2.3 *Heat test.*

S14.4.2.3.1 *Procedure.* Two samples of each thickness of each material must be supported at the bottom, with at least 51 mm of the sample above the support, in the vertical position in such a manner that, on each side, the minimum uninterrupted area of exposed surface is not less than 3225 sq mm. The samples are placed in a circulating air oven at 79 ± 3 °C for two hours.

S14.4.2.3.2 *Performance requirements.* After completion of the heat exposure and cooling to room ambient temperature, a test specimen must show no change in shape and general appearance discernable to the naked eye when compared with an unexposed specimen and continue to conform to the applicable color test requirement of this standard.

S14.5 *Signal lamp and reflective device physical test procedures and performance requirements.*

S14.5.1 *Vibration test.*

S14.5.1.1 *Procedure.* The sample device, as mounted on the support supplied, must be bolted to the anvil end of the table of the vibration test machine of Figure 21 and vibrated approximately 750 cpm through a distance of ⅛ in. The table must be spring mounted at one end and fitted with steel calks on the underside of the other end. The calks are to make contact with the steel anvil once during each cycle at the completion of the fall. The rack must be operated under a spring tension of 60 to 70 lb. The test must be continued for 1 hour.

S14.5.1.2 *Performance requirements.* After completion of the vibration test a device showing evidence of material physical weakness, lens or reflector rotation, displacement or rupture of parts except bulb failures, must be considered to have failed, providing that the rotation of lens or reflector must not be considered as a failure when tests show compliance with specifications despite such rotation.

S14.5.2 *Moisture test.*

S14.5.2.1 *Procedure.* The sample device must be mounted in its normal operating position with all drain holes open and subjected to a precipitation of 0.1 in of water per minute, delivered at an angle of 45° from a nozzle with a solid cone spray. During the test the device must revolve about its vertical axis at a rate of 4 rpm for a period of 12 hours followed by a one hour drain period where the device does not rotate and the spray stops. After completion of the moisture test the device must be examined for moisture accumulation.

S14.5.2.2 *Performance requirements.* Accumulation of moisture in excess of 2 cc or any visible moisture in a sealed reflex unit must constitute a failure.

S14.5.3 *Dust test.*

S14.5.3.1 *Samples.* A sealed unit is not required to meet the requirements of this test.

S14.5.3.2 *Procedure.* The sample device with any drain hole closed must be mounted in its normal operating position, at least 6 in from the wall in a cubical box with inside measurements of 3 ft on each side containing 10 lb of fine powered cement in accordance with ASTM C 150–56, *Standard Specification for Portland Cement* (incorporated by reference, see 571.108 S5.2 of this title). At intervals of 15 minutes during a test period of 5 hours, the dust must be agitated by compressed air or fan blower by projecting blasts of air for a 2 second period in a downward direction into the dust in such a way that the dust is completely and uniformly diffused throughout the entire cube and allowed to settle. After the completion of the dust test the exterior surface of the device must be cleaned.

S14.5.3.3 *Performance requirements.* If after a photometry test the maximum photometric intensity of the device is not more than 10% less than the maximum photometric intensity of the same device after being cleaned both inside and outside, the device is considered to have met the requirements of the dust test.

S14.5.4 *Corrosion test.*

S14.5.4.1 *Procedure.* The sample device must be subjected to a salt spray (fog) test in accordance with the latest version of ASTM B117–73, *Method of Salt Spray (Fog) Testing* (incorporated by reference, see 571.108 S5.2 of this title), for a period of 50 hours, consisting of two periods of 24 hour exposure followed by a 1 hr drying time.

S14.5.4.2 *Performance requirements.* After the completion of the corrosion test there must be no evidence of excessive corrosion which would affect the proper function of the device.

S14.6 *Headlamp physical test procedures and performance requirements.*

S14.6.1 *Abrasion test.*

S14.6.1.1 *Procedure.*

S14.6.1.1.1 *Abrading pad.* A new, unused abrading pad constructed of 0000 steel wool not less than 2.5 ± .1 cm wide, rubber cemented to a rigid base shaped to the same vertical contour of the lens, is used for each test. The abrading pad support is equal in size to the pad and the center of the support surface is within ± 2 mm of parallel to the lens surface. The ''grain'' of the pad is oriented perpendicular to the direction of motion. The density of the pad is such that when the pad is resting unweighted on the lens, the base of

the pad is no closer than 3.2 mm to the lens at its closest point.

S14.6.1.1.2 *Abrading pad alignment*. A sample headlamp is mounted in the abrasion test fixture of Figure 5 with the lens facing upward. When mounted on its support and resting on the lens of the test headlamp, the abrading pad is then weighted such that a pad pressure of 14 ± 1 KPa. exists at the center and perpendicular to the face of the lens.

S14.6.1.1.3 *Abrasion test procedure*. The pad is cycled back and forth (1 cycle) for 11 cycles at 4 ± 0.8 in (10 ± 2 cm) per second over at least 80% of the lens surface, including all the area between the upper and lower aiming pads, but not including lens trim rings and edges. A pivot must be used if it is required to follow the contour of the lens.

S14.6.1.2 *Performance requirements*. After completion of the abrasion test the sample headlamp must meet the requirements of the applicable photometry tests of Table XIX and Table XVIII. A ¼° reaim is permitted in any direction at any test point.

S14.6.2 *Chemical resistance test*.

S14.6.2.1 *Procedure*.

S14.6.2.1.1 *Test fluids*. The five test fluids used in the chemical resistance test include:

(a) ASTM Reference Fuel C, which is composed of Isooctane 50% volume and Toluene 50% volume. Isooctane must conform to A2.7 in Annex 2 of the Motor Fuels Section of the 1985 Annual Book of ASTM Standards, Vol. 05.04 (incorporated by reference, see 571.108 S5.2 of this title), and Toluene must conform to ASTM specification D362–84, *Standard Specification for Industrial Grade Toluene* (incorporated by reference, see 571.108 S5.2 of this title). ASTM Reference Fuel C must be used as specified in: Paragraph A2.3.2 and A2.3.3 of Annex 2 to Motor Fuels; Section 1 in the 1985 Annual Book of ASTM Standards, Vol. 05.04 (incorporated by reference, see 571.108 S5.2 of this title); and OSHA Standard 29 CFR 1910.106—Handling Storage and Use of Flammable Combustible Liquids;

(b) Tar remover (consisting by volume of 45% xylene and 55% petroleum base mineral spirits);

(c) Power steering fluid (as specified by the vehicle manufacturer for use in the motor vehicle on which the headlamp is intended to be installed);

(d) Windshield washer fluid consisting of 0.5% monoethanolamine with the remainder 50% concentration of methanol/distilled water by volume; and

(e) Antifreeze (50% concentration of ethylene glycol/distilled water by volume).

S14.6.2.1.2 *Fluid application*. The entire exterior lens surface of the sample headlamp mounted in the headlamp test fixture and top surface of the lens-reflector joint is wiped once to the left and once to the right with a 6 inch square soft cotton cloth (with pressure equally applied) which has been saturated once in a container with 2 ounces of five different test fluids listed above. The lamp is wiped within 5 seconds after removal of the cloth from the test fluid. A new lamp sample may be used with each fluid.

S14.6.2.1.3 *Test duration*. After the headlamp sample has been wiped with the test fluid, it must be stored in its designed operating attitude for 48 hours at a temperature of 23 °C ± 4 °C and a relative humidity of 30% ± 10%. At the end of the 48-hour period, the headlamp is wiped clean with a soft dry cotton cloth and visually inspected.

S14.6.2.2 *Performance requirements*. After completion of the chemical resistance test, the sample headlamp must have no surface deterioration, coating delamination, fractures, deterioration of bonding or sealing materials, color bleeding, or color pickup visible without magnification and the headlamp must meet the requirements of the applicable photometry tests of Table XIX and Table XVIII. A ¼° reaim is permitted in any direction at any test point.

S14.6.3 *Corrosion test*.

S14.6.3.1 *Procedure*. A sample headlamp, mounted on a headlamp test fixture in designed operating position and including all accessory equipment necessary to operate in its normal manner, is subjected to a salt spray (fog) test in accordance with ASTM B117–73, *Method of Salt Spray (Fog) Testing* (incorporated by reference, see 571.108 S5.2 of this title), for 50 total hours, consisting of two periods of 24 hours exposure followed by a 1 hour drying period. If a portion of the device is completely protected in service, that portion is covered to prevent salt fog entry during exposure. After removal from the salt spray and the final 1 hour drying period the sample headlamp is examined for corrosion that affect any other applicable tests contained in S14.6. If such corrosion is found, the affected test(s) must be performed on the corrosion sample and the results recorded.

S14.6.3.2 *Performance requirements*. After completion of the corrosion test, the sample headlamp must not have any observed corrosion which would result in the failure of any other applicable tests contained in S14.6 and no corrosion of the headlamp mounting and aiming mechanism that would result in the failure of the aiming adjustment tests, inward force test, or torque deflection test of S14.6.

S14.6.4 *Corrosion-connector test*.

S14.6.4.1 *Procedure*.

S14.6.4.1.1 A headlamp connector test must be performed on each filament circuit of the sample headlamp prior to the test in S14.6.4.1.2 according to Figure 4 and S14.6.15. The power source is set to provide 12.8 volts and the resistance must be set to produce 10 amperes.

S14.6.4.1.2 The headlamp, with connector attached to the terminals, unfixtured and in its designed operating attitude with all drain holes, breathing devices or other designed

openings in their normal operating positions, is subjected to a salt spray (fog) test in accordance with ASTM B117–73, *Method of Salt Spray (Fog) Testing* (incorporated by reference, see 571.108 S5.2 of this title), for 240 hours, consisting of ten successive 24-hour periods.

S14.6.4.1.3 During each period, the headlamp is mounted in the middle of the chamber and exposed for 23 hours to the salt spray. The spray is not activated during the 24th hour. The bulb is removed from the headlamp and from the test chamber during the one hour of salt spray deactivation and reinserted for the start of the next test period, at the end of the first and last three 23-hour periods of salt spray exposure, and at the end of any two of the fourth through seventh 23-hour periods of salt-spray exposure.

S14.6.4.1.4 The test chamber is closed at all times except for a maximum of 2 minutes which is allowed for removal or replacement of a bulb during each period.

S14.6.4.1.5 After the ten periods, the lens-reflector unit without the bulb must be immersed in deionized water for 5 minutes, then secured and allowed to dry by natural convection only.

S14.6.4.1.6 Using the voltage, resistance and pre-test set up of S14.6.4.1.1 the current in each filament circuit must be measured after the test conducted in S14.6.4.1.2.

S14.6.4.2 *Performance requirements.*

S14.6.4.2.1 After the completion of the corrosion-connector test, the sample headlamp must show no evidence of external or internal corrosion or rust visible without magnification.

S14.6.4.2.2 Loss of adhesion of any applied coating must not occur more than 3.2 mm from any sharp edge on the inside or out.

S14.6.4.2.3 Corrosion may occur on terminals only if the test current produced during the test of S14.6.4.1.6 is not less than 9.7 amperes.

S14.6.5 *Dust test.*

S14.6.5.1 *Procedure.*

S14.6.5.1.1 A sample headlamp, mounted on a headlamp test fixture, with all drain holes, breathing devices or other designed openings in their normal operating positions, is positioned within a cubical box, with inside measurements of 900 mm on each side or larger if required for adequate wall clearance (*i.e.*, a distance of at least 150 mm between the headlamp and any wall of the box).

S14.6.5.1.2 The box contains 4.5 kg of fine powdered cement which conforms to the ASTM C150–77, *Standard Specification for Portland Cement* (incorporated by reference, see 571.108 S5.2 of this title). Every 15 minutes, the cement is agitated by compressed air or fan blower(s) by projecting blasts of air for a two-second period in a downward direction so that the cement is diffused as uniformly as possible throughout the entire box.

S14.6.5.1.3 This test is continued for five hours after which the exterior surfaces of the headlamp are wiped clean.

S14.6.5.2 *Performance requirements.* After completion of the dust test, the sample headlamp must meet the requirements of the applicable photometry tests of Table XIX and Table XVIII. A ¼° reaim is permitted in any direction at any test point.

S14.6.6 *Temperature cycle test and internal heat test.*

S14.6.6.1 *Samples.* A sample headlamp with one or more replaceable light sources is tested according to the procedures of this section for a temperature cycle test and an internal heat test. The same sample headlamp is used in the temperature cycle test and then in the internal heat test.

S14.6.6.2 *General procedure.*

S14.6.6.2.1 Tests are made with all filaments lighted at design voltage that are intended to be used simultaneously in the headlamp and which in combination draw the highest total wattage. These include but are not limited to filaments used for turn signal lamps, fog lamps, parking lamps, and headlamp lower beams lighted with upper beams when the wiring harness is so connected on the vehicle.

S14.6.6.2.2 If a turn signal is included in the headlamp assembly, it is operated at 90 flashes a minute with a 75% ± 2% current ''on time.''

S14.6.6.2.3 If the lamp produces both the upper and lower beam, it is tested in both the upper beam mode and the lower beam mode under the conditions above described, except for a headlamp with a single type HB1 or type HB2 light source.

S14.6.6.3 *Temperature cycle test.*

S14.6.6.3.1 *Procedure.*

S14.6.6.3.1.1 A sample headlamp, mounted on a headlamp test fixture, is subjected to 10 complete consecutive cycles having the thermal cycle profile shown in Figure 6.

S14.6.6.3.1.2 During the hot cycle, the lamp, is energized commencing at point ''A'' of Figure 6 and de-energized at point ''B.''

S14.6.6.3.1.3 Separate or single test chambers may be used to generate the environment of Figure 6.

S14.6.6.3.1.4 All drain holes, breathing devices or other openings or vents of the headlamps are set in their normal operating positions.

S14.6.6.3.2 *Performance requirements.* After completion of the temperature cycle test, the sample headlamp must:

(a) show no evidence of delamination, fractures, entry of moisture, or deterioration of bonding material, color bleeding, warp or deformation visible without magnification;

(b) show no lens warpage greater than 3 mm when measured parallel to the optical axis at the point of intersection of the axis of each light source with the exterior surface of the lens; and

(c) meet the requirements of the applicable photometry tests of Table XIX and Table XVIII. A ¼° reaim is permitted in any direction at any test point.

S14.6.6.4 *Internal heat test.*

S14.6.6.4.1 *Procedure.*

S14.6.6.4.1.1 A sample headlamp lens surface that would normally be exposed to road dirt is uniformly sprayed with any appropriate mixture of dust and water or other materials to reduce the photometric output at the H–V test point of the upper beam (or the ½°D–1½°R test point of the lower beam as applicable) to 25% ± 2% of the output originally measured in the applicable photometric compliance test.

S14.6.6.4.1.2 A headlamp with a single type HB1 or type HB2 light source is tested on the upper beam only.

S14.6.6.4.1.3 Such reduction is determined under the same conditions as that of the original photometric measurement.

S14.6.6.4.1.4 After the photometric output of the lamp has been reduced as specified above, the sample lamp and its mounting hardware must be mounted in an environmental chamber in a manner similar to that indicated in Figure 7 ''Dirt/Ambient Test Setup.''

S14.6.6.4.1.5 The headlamp is soaked for one hour at a temperature of 35° + 4° − 0 °C) and then the lamp is energized according to the procedure of this section for one hour in a still air condition, allowing the temperature to rise from the soak temperature.

S14.6.6.4.1.6 At the end of one hour the sample lamp is returned to a room ambient temperature of 23° + 4° − 0 °C and a relative humidity of 30% ± 10% and allowed to stabilize to the room ambient temperature. The lens is then cleaned.

S14.6.6.4.2 *Performance requirements.* After completion of the temperature cycle test and meeting its requirements, and completion of the internal heat test, the sample headlamp must:

(a) have no lens warpage greater than 3 mm when measured parallel to the optical axis at the point of intersection of the axis of each light source with the exterior surface of the lens, and

(b) meet the requirements of the applicable photometry tests of Table XIX and Table XVIII. A ¼° reaim is permitted in any direction at any test point.

S14.6.7 *Humidity test.*

S14.6.7.1 *Procedure.*

S14.6.7.1.1 The test fixture consists of a horizontal steel plate to which three threaded steel or aluminum rods of ½ inch diameter are screwed vertically behind the headlamp.

S14.6.7.1.2 The sample headlamp assembly is clamped to the vertical rods, which are behind the headlamp. All attachments to the headlamp assembly are made behind the lens and vents or openings, and are not within 2 inches laterally of a vent inlet or outlet.

S14.6.7.1.3 The mounted headlamp assembly is oriented in its design operating position, and is placed in a controlled environment at a temperature of 100° + 7° − 0 °F (38° + 4° − 0 °C) with a relative humidity of not less than 90%. All drain holes, breathing devices, and other openings are set in their normal operation positions for all phases of the humidity test.

S14.6.7.1.4 The headlamp is subjected to 24 consecutive 3-hour test cycles. In each cycle, the headlamp is energized for 1 hour at design voltage with the highest combination of filament wattages that are intended to be used, and then de-energized for 2 hours. If the headlamp incorporates a turn signal then the turn signal flashes at 90 flashes per minute with a 75% ± 2% current ''on-time.''

S14.6.7.1.5 Within 3 minutes after the completion of the 24th cycle, the air flow test will begin. The following procedure shall occur: the mounted assembly is removed, placed in an insulating box and covered with foam material so that there is no visible air space around the assembly; the box is closed, taken to the air flow test chamber, and placed within it. Inside the chamber, the assembly with respect to the air flow, is oriented in its design operating position. The assembly is positioned in the chamber so that the center of the lens is in the center of the opening of the air flow entry duct during the test. The headlamp has at least 3 inches clearance on all sides, and at least 4 inches to the entry and exit ducts at the closest points. If vent tubes are used which extend below the lamp body, the 3 inches are measured from the bottom of the vent tube or its protection. The temperature of the chamber is 73° + 7° − 0 °F (23° + 4° − 0 °C) with a relative humidity of 30% + 10% − 0%. The headlamp is not energized.

S14.6.7.1.6 Before the test specified in paragraph S14.6.7.1.7 of this section, the uniformity of the air flow in the empty test chamber at a plane 4 inches downstream of the air entry duct is measured over a 4 inch square grid. The uniformity of air flow at each grid point is ± 10% of the average air flow specified in paragraph S14.6.7.1.7 of this section.

S14.6.7.1.7 The mounted assembly in the chamber is exposed, for one hour, to an average air flow of 330 +0 −30 ft/min as measured with an air velocity measuring probe having an accuracy of ± 3% in the 330 ft/min range. The average air flow is the average of the velocity recorded at six points around the perimeter of the lens. The six points are determined as follows: At the center of the lens, construct a horizontal plane. The first two points are located in the plane, 1 inch outward from the intersection of the plane and

each edge of the lens. Then, trisect the distance between these two points and construct longitudinal vertical planes at the two intermediate locations formed by the trisection. The four remaining points are located in the vertical planes, one inch above the top edge of the lens, and one inch below the bottom edge of the lens.

S14.6.7.1.8 After one hour, the headlamp is removed and inspected for moisture.

S14.6.7.2 *Performance requirements*. After completion of the humidity test, the sample headlamp must show no evidence of interior delamination or moisture, fogging or condensation visible without magnification.

S14.6.8 *Vibration test*.

S14.6.8.1 *Samples*. The mounting bracket with a sample headlamp installed must not have a resonant frequency in the 10–55 Hz. range.

S14.6.8.2 *Procedure*. The mounted sample headlamp is bolted to the anvil end of the table of the vibration test machine of Figure 21 and vibrated 750 cpm through a distance of 1/8 in. The table is spring mounted at one end and fitted with steel calks on the underside of the other end. The table is of sufficient size to completely contain the test fixture base with no overhang. The calks are to make contact with the steel anvil once during each cycle at the completion of the fall. The rack is operated under a spring tension of 60 to 70 lb. The vibration is applied in the vertical axis of the headlamp as mounted on the vehicle. Bulb filaments are not energized during the test. The test is continued for 1 hour.

S14.6.8.3 *Performance requirements*. After completion of the vibration test, there must be no evidence of loose or broken parts, other than filaments, visible without magnification.

S14.6.9 *Sealing test*.

S14.6.9.1 *Procedure*.

S14.6.9.1.1 An unfixtured sample headlamp in its design mounting position is placed in water at a temperature of 176° ± 5 °F (60° ± 3 °C) for one hour. The headlamp is energized in its highest wattage mode, with the test voltage at 12.8 ± 0.1V during immersion.

S14.6.9.1.2 The lamp is then de-energized and immediately submerged in its design mounting position into water at 32° +5° −0 °F (0° +3° −0 °C). The water is in a pressurized vessel, and the pressure is increased to 10 psi (70 kPa), upon placing the lamp in the water. The lamp must remain in the pressurized vessel for a period of thirty minutes.

S14.6.9.1.3 This entire procedure is repeated for four cycles.

S14.6.9.1.4 Then the lamp is inspected for any signs of water on its interior. During the high temperature portion of the cycles, the lamp is observed for signs of air escaping from its interior.

S14.6.9.2 *Performance requirements*. After completion of the sealing test, a sample headlamp confirmed to be sealed need not meet the corrosion test, dust test, or humidity test of this Section. If any water is on the interior or air escapes, the lamp is not a sealed lamp.

S14.6.10 *Chemical resistance test of reflectors of replaceable lens headlamps test*.

S14.6.10.1 *Procedure*.

S14.6.10.1.1 *Test fluids*. The three test fluids used in the chemical resistance test include;

(a) Tar remover (consisting by volume of 45% xylene and 55% petroleum base mineral spirits);

(b) Mineral spirits; and

(c) Fluids other than water contained in the manufacturer's instructions for cleaning the reflector.

S14.6.10.1.2 *Fluid application*. With a sample headlamp in the headlamp test fixture and the lens removed, the entire surface of the reflector that receives light from a headlamp light source is wiped once to the left and once to the right with a 6-inch square soft cotton cloth (with pressure equally applied) which has been saturated once in a container with 2 ounces of one of the test fluids listed in S14.6.10.1.1. The lamp is wiped within 5 seconds after removal of the cloth from the test fluid.

S14.6.10.1.3 *Test duration*. After the headlamp has been wiped with the test fluid, it is stored in its designed operating attitude for 48 hours at a temperature of 73° ± 7 °F (23° ± 4 °C) and a relative humidity of 30% ± 10%. At the end of the 48-hour period, the headlamp is wiped clean with a soft dry cotton cloth and visually inspected.

S14.6.10.2 *Performance requirements*. After completion of the chemical resistance test, the sample headlamp must have no surface deterioration, coating delamination, fractures, deterioration of bonding or sealing materials, color bleeding or color pickup visible without magnification and the headlamp must meet the requirements of the applicable photometry tests of Table XIX and Table XVIII. A ¼° re-aim is permitted in any direction at any test point.

S14.6.11 *Corrosion resistance test of reflectors of replaceable lens headlamps test*.

S14.6.11.1 *Procedure*.

S14.6.11.1.1 A sample headlamp with the lens removed, unfixtured and in its designed operating attitude with all drain holes, breathing devices or other designed openings in their normal operating positions, must be subjected to a salt spray (fog) test in accordance with ASTM B117–73, *Method of Salt Spray (Fog) Testing* (incorporated by reference, see 571.108 S5.2 of this title), for 24 hours, while mounted in the middle of the chamber.

S14.6.11.1.2 Afterwards, the headlamp must be stored in its designed operating attitude for 48 hours at a temperature of 73° ± 7 °F (23° ± 4 °C) and a relative humidity of 30%

± 10% and allowed to dry by natural convection only. At the end of the 48-hour period, the reflector must be cleaned according to the instructions supplied with the headlamp manufacturer's replacement lens, and inspected. The lens and seal must then be attached according to these instructions and the headlamp tested for photometric performance.

S14.6.11.2 *Performance requirements.* After the completion of the corrosion test, the sample headlamp must show no evidence of corrosion or rust visible without magnification on any part of the headlamp reflector that receives light from a headlamp light source, on any metal light or heat shield assembly, or on a metal reflector of any other lamp. The sample headlamp with the replacement lens installed must meet the requirements of the applicable photometry tests of Table XIX and Table XVIII. A ¼° reaim is permitted in any direction at any test point.

S14.6.12 *Inward force test.*

S14.6.12.1 *Procedure.* A sample headlamp mechanism, including the aiming adjusters, must be subjected to an inward force of 222 N directed normal to the headlamp aiming plane and symmetrically about the center of the headlamp lens face.

S14.6.12.2 *Performance requirements.* After the completion of the inward force test, a sample headlamp must not permanently recede by more than 2.5 mm. The aim of the headlamp must not permanently deviate by more than 3.2 mm at a distance of 7.6 m. The aim of any headlamp that is capable of being mechanically aimed by externally applied aiming devices must not change by more than 0.30°.

S14.6.13 *Torque deflection test.*

S14.6.13.1 *Procedure.*

S14.6.13.1.1 The sample headlamp assembly is mounted in designed vehicle position and set at nominal aim (H=0, V=0).

S14.6.13.1.2 A sealed beam headlamp, except Type G and Type H, is removed from its mounting and replaced by the applicable deflectometer. (Type C and Type D-Figure 18, Type A and Type E-Figure 16, Type B-Figure 17, and Type F-Figure 14).

S14.6.13.1.3 Sealed beam headlamps Type G and Type H have the adapter of Figure 15 and the deflectometer of Figure 14 attached to the headlamp.

S14.6.13.1.4 A torque of 2.25 Nm must be applied to the headlamp assembly through the deflectometer and a reading on the thumbwheel is taken. The torque must be removed and a second reading on the thumbwheel is taken.

S14.6.13.1.5 Headlamps other than sealed beam headlamps must have the downward force used to create the torque applied parallel to the aiming reference plane, through the aiming pads, and displaced forward using a lever arm such that the force is applied on an axis that is perpendicular to the aiming reference plane and originates at the center of the aiming pad pattern (see Figure 3).

S14.6.13.1.6 For headlamps using the aiming pad locations of Group I, the distance between the point of application of force and the aiming reference plane is not less than 168.3 mm plus the distance from the aiming reference plane to the secondary plane, if used.

S14.6.13.1.7 For headlamps using the aiming pad locations of Group II, the distance between the point of application of force and the aiming reference plane is not less than 167.9 mm plus the distance to the secondary plane, if used.

S14.6.13.1.8 For headlamps using the non-adjustable Headlamp Aiming Device Locating Plates for the 146 mm diameter, the 176 mm diameter, and the 92x150 mm sealed beam, the distance between the point of application of force and the aiming plane is not, respectively, less than 177.4 mm, 176.2 mm, and 193.7 mm.

S14.6.13.2 *Performance requirements.* The aim of each sample headlamp must not deviate more than 0.30° when the downward torque is removed.

S14.6.14 *Retaining ring test.*

S14.6.14.1 *Procedure.* A sample headlamp with the minimum flange thickness of: Type A–31.5 mm, Type B–10.1 mm, Type C–11.8 mm, Type D–11.8 mm, Type E–31.5 mm, and Type F–8.6 mm, is secured between the appropriate mounting ring and retaining ring (mounting ring and aiming ring for Type F).

S14.6.14.2 *Performance requirements.* The sample headlamp when secured per the procedure must be held tight enough that it will not rattle.

S14.6.15 *Headlamp connector test.*

S14.6.15.1 *Procedure.* A sample headlamp connected into the test circuit of Figure 4 has the power supply adjusted until 10 amperes DC are flowing through the circuit. The test is repeated for each filament circuit of the headlamp.

S14.6.15.2 *Performance requirements.* The voltage drop, as measured in the test circuit of Figure 4, must not exceed 40 mv DC in any applicable filament circuit of the sample headlamp.

S14.6.16 *Headlamp wattage test.*

S14.6.16.1 *Procedure.* A sample headlamp that has been seasoned is energized so as to have 12.8v ± 20 mv DC applied across each filament circuit and the current flowing in each circuit is measured.

S14.6.16.2 *Performance requirements.* The wattage of each filament circuit of the sample headlamp must not exceed the applicable value for that type of headlamp as shown in Table II.

S14.6.17 *Aiming adjustment test-laboratory.*

S14.6.17.1 *Procedure.* A sample headlamp is mounted in design position at nominal (H =

0, V = 0) aim with an accurate measuring device such as a spot projector or other equally accurate means attached. The headlamp is adjusted to the extremes of travel in each horizontal and vertical direction.

S14.6.17.2 *Performance requirements.* Visually aimed lower beam headlamps without a VHAD are required not to have a horizontal adjustment mechanism and horizontal aim range requirements do not apply.

S14.6.17.2.1 A sample sealed beam headlamp, other than a Type F, tested per the procedure must provide a minimum of ± 4.0° adjustment range in both the vertical and horizontal planes and if equipped with independent vertical and horizontal aiming screws, the adjustment must be such that neither the vertical nor horizontal aim must deviate more than 100 mm from horizontal or vertical planes, respectively, at a distance of 7.6 m through an angle of ± 4.0°.

S14.6.17.2.2 A sample Type F sealed beam, integral beam, replaceable bulb, or combination headlamp tested per the procedure must provide a minimum of ± 4.0° adjustment range in the vertical plane and ± 2.5° in the horizontal plane and if equipped with independent vertical and horizontal aiming screws, the adjustment must be such that neither the vertical nor horizontal aim must deviate more than 100 mm from horizontal or vertical planes, respectively, at a distance of 7.6 m through an angle of ± 2.5° and ± 4.0°, respectively.

S14.6.17.2.3 A sample headlamp that is aimed by moving the reflector relative to the lens and headlamp housing, and vice versa must provide a minimum adjustment range in the vertical plane not less than the full range of the pitch on the vehicle on which it is installed and ± 2.5° in the horizontal plane.

S14.6.18 *Aiming adjustment test-on vehicle.*

S14.6.18.1 *Procedure.*

S14.6.18.1.1 A sample headlamp is mounted on the vehicle at nominal (H = 0, V = 0) aim with an accurate measuring device such as a spot projector or other equally accurate means attached.

S14.6.18.1.2 The installed range of static pitch angle is, at a minimum, determined from unloaded vehicle weight to gross vehicle weight rating, and incorporates pitch angle effects from maximum trailer or trunk loadings, the full range of tire intermix sizes and suspensions recommended and/or installed by the vehicle manufacturer, and the anticipated effects of variable passenger loading.

S14.6.18.1.3 The headlamp is adjusted to the extremes of travel in each horizontal and vertical direction.

S14.6.18.2 *Performance requirements.*

S14.6.18.2.1 A sample headlamp tested per the procedure must provide a minimum vertical adjustment range not less than the full range of pitch of the vehicle on which it is installed.

S14.6.18.2.2 The vertical aim mechanism must be continuously variable over the full range.

S14.6.18.2.3 The adjustment of one aim axis through its full on-vehicle range must not cause the aim of the other axis to deviate more than ± 0.76°. If this performance is not achievable, the requirements of S10.18.3.1 apply, except that if the aiming mechanism is not a VHAD, the requirements specific to VHADs are not applicable, and the instruction must be specific to the aiming mechanism installed.

S14.7 *Replaceable light source physical test procedures and performance requirements.*

S14.7.1 *Deflection test for replaceable light sources.*

S14.7.1.1 *Procedure.*

S14.7.1.1.1 With the sample light source rigidly mounted in a fixture in a manner indicated in Figure 8, a force 4.0 ± 0.1 pounds (17.8 ± 0.4N) is applied at a distance ''A'' from the reference plane perpendicular to the longitudinal axis of the glass capsule and parallel to the smallest dimension of the pressed glass capsule seal.

S14.7.1.1.2 The force is applied (using a rod with a hard rubber tip with a minimum spherical radius of .039 in [1 mm]) radially to the surface of the glass capsule in four locations in a plane parallel to the reference plane and spaced at a distance ''A'' from that plane. These force applications are spaced 90° apart starting at the point perpendicular to the smallest dimension of the pressed seal of the glass capsule.

S14.7.1.1.3. The bulb deflection is measured at the glass capsule surface at 180° opposite to the force application. Distance ''A'' for a replaceable light source other than an HB Type is the dimension provided in accordance with appendix A of part 564 of this chapter, section I.A.1 if the light source has a lower beam filament, or as specified in section I.B.1 if the light source has only an upper beam filament.

S14.7.1.2 *Performance requirements.* After completion of the deflection test, a sample light source must have no permanent deflection of the glass envelope exceeding 0.13 mm in the direction of applied force.

S14.7.2 *Pressure test for replaceable light sources.*

S14.7.2.1 *Procedure.*

S14.7.2.1.1 The capsule, lead wires and/or terminals, and seal on each sample Type HB1, Type HB3, Type HB4, and Type HB5 light source, and on any other replaceable light source which uses a seal, is installed in a pressure chamber as shown in Figure 10 so as to provide an airtight seal. The diameter of the aperture in Figure 10 on a replaceable light source (other than an HB Type) must be that dimension furnished for such light

source in compliance with appendix A or appendix B of part 564 of this chapter.

S14.7.2.1.2 The light source is immersed in water for one minute while inserted in a cylindrical aperture specified for the light source, and subjected to an air pressure of 70 KPa (10 psig) on the glass capsule side.

S14.7.2.2 *Performance requirements.* After completion of the pressure test, the sample light source with an airtight seal on the low pressure (connector side) must show no evidence of air bubbles on that side.

S14.7.3 *Replaceable light source power and flux measurement procedure.* The measurement of maximum power and luminous flux that is submitted in compliance with section VII of appendix A of part 564 of this chapter, or section IV of appendix B of part 564 of this chapter, is made in accordance with this paragraph.

S14.7.3.1 *Seasoning.* The filament or discharge arc is seasoned before measurement of either maximum power and luminous flux.

S14.7.3.1.1 *Resistive filament source.* Seasoning of a light source with a resistive element type filament is made in accordance with this S14.2.5.4 of this standard.

S14.7.3.1.2 *Discharge source.* For a light source using excited gas mixtures as a filament or discharge arc, seasoning of the light source system, including any ballast required for its operation, is made in accordance with section 4.0 of SAE Recommended Practice J2009 FEB93, *Discharge Forward Lighting Systems.*

S14.7.3.2 *Test voltage.* Measurements are made with a direct current test voltage of 12.8 v regulated within one quarter of one percent.

S14.7.3.3 *Luminous flux measurement.* The measurement of luminous flux is made in accordance with the Illuminating Engineering Society of North America, LM 45; IES *Approved Method for Electrical and Photometric Measurements of General Service Incandescent Filament Lamps* (April 1980) (incorporated by reference, see 571.108 S5.2 of this title).

S14.7.3.3.1 *Resistive filament light source setup.* Luminous flux measurements are made with the black cap installed on Type HB1, Type HB2, Type HB4, and Type HB5, and on any other replaceable light source so designed; and is with the electrical conductor and light source base shrouded with an opaque white cover, except for the portion normally located within the interior of the lamp housing. The measurement of luminous flux for the Types HB3 and HB4 is made with the base covered with a white cover as shown in the drawings for Types HB3 and HB4 filed in Docket No. NHTSA 98–3397. The white covers are used to eliminate the likelihood of incorrect lumen measurement that will occur should the reflectance of the light source base and electrical connector be low.

S14.7.3.3.2 *Discharge light source setup.* With the test voltage applied to the ballast input terminals, the measurement of luminous flux is made with the black cap installed, if so designed, and is made with an opaque white colored cover, except for the portion normally located within the interior of the lamp housing.

S14.8 *Vehicle headlamp aiming devices (VHAD) physical test procedures and performance requirements.*

S14.8.1 *Samples.* The same VHAD and associated headlamp(s) or headlamp assembly must be rigidly mounted in a headlamp test fixture with the aiming plane horizontal and vertical and with the scale on the device set at 0.

S14.8.2 *Scale graduation test.*

S14.8.2.1 *Procedure.* Check each graduation on the horizontal and vertical aim scales.

S14.8.2.2 *Performance requirements.* Scale graduation from correct aim must not exceed ± 0.2° horizontally and ± 0.1° vertically.

S14.8.3 *Cold scale graduation test.*

S14.8.3.1 *Procedure.* The VHAD and an unlighted headlamp assembly must then be stabilized at −7° ± 3 °C in a circulating air environmental test chamber for a 30 minute temperature soak.

S14.8.3.2 *Performance requirements.* After completion of a 30 minute temperature soak the variation from correct aim shown by the sample VHAD must not exceed ± 0.2° horizontally and ± 0.1° vertically.

S14.8.4 *Hot scale graduation test.*

S14.8.4.1 *Procedure.* The VHAD and the headlamp assembly with its highest wattage filament, or combination of filaments intended to be used simultaneously, energized at its design voltage, is then stabilized at 38° ± 3 °C in a circulating air environmental test chamber for a 30 minute temperature soak.

S14.8.4.2 *Performance requirements.* After completion of a 30 minute temperature soak the variation from correct aim shown by the sample VHAD must not exceed ± 0.2° horizontally and ± 0.1° vertically.

S14.8.5 *Thermal cycle test.*

S14.8.5.1 *Procedure.* The VHAD and an unlighted headlamp assembly are then placed in a circulating air environmental test chamber and exposed to a temperature of 60° ± 3 °C for 24 hours, followed by a temperature of −40° ± 3 °C for 24 hours, and are then permitted to return to room temperature.

S14.8.5.2 *Performance requirements.* After completion of the thermal cycle test the variation from correct aim shown by the sample VHAD must not exceed ± 0.2° horizontally and ± 0.1° vertically and the VHAD and headlamp assembly must show no damage which would impair its ability to perform as specified in this standard.

S14.8.6 *Corrosion test.*

S14.8.6.1 *Procedure.* The VHAD and headlamp assembly are then tested according to the headlamp corrosion test of S14.6.3.

S14.8.6.2 *Performance requirements.* After completion of the corrosion test the sample

VHAD and headlamp must not have any observed corrosion that would result in the failure of any other applicable tests contained in this section.

S14.8.7 *Photometry test.*

S14.8.7.1 *Procedure.* The VHAD and headlamp assembly are then tested for photometric compliance according to the procedure of S14.2.5 and for replacement units per S10.18.8.4.

S14.8.7.2 *Performance requirements.* The sample headlamp must comply with the applicable photometric requirements of Table XIX and Table XVIII and with replacement units installed per S10.18.8.4.

S14.9 *Associated equipment physical test procedures and performance requirements.*

S14.9.1 *Turn signal operating unit durability test.*

S14.9.1.1 *Power supply specifications.* During the test, the unit is operated at 6.4 volts for 6 volt systems or 12.8 volts for 12 volt systems from a power supply meeting the following requirements:

(a) An output current that is at least 10 times the load current;

(b) Voltage regulation that allows a voltage change of less than 5%;

(c) Ripple voltage of not more than 5%;

(d) A response time of not more than 25 milliseconds rise time from 0 to rated current at rated voltage in a pure resistance circuit; and

(e) An output impedance of not more than 0.005 ohms dc.

S14.9.1.2 *Procedure.*

S14.9.1.2.1 The sample unit is operated with the maximum bulb load it will experience on the vehicle on which it will be installed. Bulbs that fail during the test are replaced. The turn signal flasher is not to be included in the test circuit. When the unit includes a self-canceling means, the test equipment is arranged so that the unit will be turned ''off'' in its normal operating manner.

S14.9.1.2.2 The test is conducted at a rate not to exceed 15 complete cycles per minute. One complete cycle consists of the following sequence: Off, left turn, off, right turn, and return to off.

S14.9.1.2.3 The voltage drop from the input terminal of the device to each lamp output terminal, including 3 in of 16 or 18 gage wire, is measured at the start of the test, at intervals of not more than 25,000 cycles during the test, and at the completion of the test.

S14.9.1.3 *Performance requirements.*

S14.9.1.3.1 A turn signal operating unit is considered to have met the requirements of the durability test if it remains operational after completing at least 100,000 cycles, and the voltage drop between the input contact and any output contact, including required length of wire, does not exceed 0.25 volts.

S14.9.1.3.2 A turn signal operating unit is considered to have met the requirements of the durability test if it remains operational after completing at least 175,000 cycles for a unit installed on a multipurpose passenger vehicle, truck, or bus 2032 mm or more in overall width, and the voltage drop between the input contact and any output contact, including required length of wire, does not exceed 0.25 volts.

S14.9.1.3.3 If stop signals also operate through the turn signal operating unit, the voltage drop of any additional switch contacts must meet the same requirements as the turn signal contacts.

S14.9.2 *Vehicular hazard warning signal operating unit durability test.*

S14.9.2.1 *Procedure.*

S14.9.2.1.1 The sample unit is operated at its rated voltage with the maximum bulb load it will experience on the vehicle on which it will be installed. Bulbs that fail during the test are replaced. The hazard warning signal flasher is not to be included in the test circuit.

S14.9.2.1.2 The unit is turned ''on'' and ''off'' in its normal operating manner at a rate not to exceed 15 complete cycles per minute. One complete cycle consists of the sequence: Off, on, and return to off. The test consists of 10,000 cycles at an ambient temperature of 75° ± 10 °F followed by 1 hour constant ''on'' at the same temperature.

S14.9.2.1.3 The voltage drop from the input terminal of the device to each lamp output terminal, including 3 in of 16 or 18 gage wire, is measured at the start of the test and at the completion of the test.

S14.9.2.2 *Performance requirements.* A hazard warning signal operating unit is considered to have met the requirements of the durability test if it remains operational after completing 10,000 cycles and the 1 hour constant ''on'' and the voltage drop between the input contact and any output contact, including required length of wire, does not exceed 0.3 volts for either 6.4 or 12.8 line voltage both at the start and completion of the test.

S14.9.3 *Turn signal flasher and vehicular hazard warning signal flasher tests.*

S14.9.3.1 *Standard test circuit.* All turn signal flasher and vehicular hazard warning signal flasher tests use the standard test circuit of Figure 22.

S14.9.3.1.1 *Test circuit setup.*

S14.9.3.1.1.1 The effective series resistance in the total circuit between the power supply and the bulb sockets (excluding the flasher and bulb load(s) using shorting bars) is 0.10 ± 0.01 ohm.

S14.9.3.1.1.2 The circuit resistance at A–B of Figure 22 is measured with flasher and bulb load(s) each shorted out with an effective shunt resistance not to exceed 0.005 ohms.

S14.9.3.1.1.3 The voltage to the bulbs at C–D of Figure 22 is adjusted to 12.8 volts (or 6.4 volts) with the flasher shorted out by an effective shunt resistance not to exceed 0.005 ohms. The load current is adjusted by simultaneously adjusting trimmer resistors, R.

S14.9.3.1.1.4 For testing fixed-load flashers at other required voltages, adjust the power supply to provide required voltages, at the required temperatures, at C–D of Figure 22, without readjustment of trimming resistors, R.

S14.9.3.1.1.5 For variable-load flashers, the circuit is first adjusted for 12.8 volts (or 6.4 volts) at C–D of Figure 22, with the minimum required load, and the power supply is adjusted to provide other required test voltages, at required temperatures, at C–D of Figure 22, without readjustment of trimming resistors, R (each such required voltage being set with the minimum required load in place). The required voltage tests with the maximum load are conducted without readjusting each corresponding power supply voltage, previously set with minimum bulb load.

S14.9.3.1.1.6 A suitable high impedance measuring device connected to points X–Y in Figure 22 is used for measuring flash rate, percent current ''on'' time, and voltage drop across the flasher. The measurement of these quantities does not affect the circuit.

S14.9.3.2 *Power supply specifications.*

S14.9.3.2.1 *Starting time, voltage drop, and flash rate and percent current ''on'' time tests.* The power supply used in the standard test circuit for conducting the starting time, the voltage drop, and the flash rate and percent current ''on'' time tests must comply with the following specifications:

(a) Must not generate any adverse transients not present in motor vehicles;

(b) Be capable of supplying 11–16 vdc for 12 volt flashers and 5–9 vdc for 6 volt flashers to the input terminals of the standard test circuit;

(c) Be capable of supplying required design current(s) continuously and inrush currents as required by the design bulb load complement;

(d) Be capable of supplying an output voltage that does not deviate more than 2% with changes in the static load from 0 to maximum (not including inrush current) nor for static input line voltage variations;

(e) Be capable of supplying an output voltage that does not deviate more than 1.0 vdc from 0 to maximum load (including inrush current) and must recover 63% of its maximum excursion within 100 μsec; and

(f) Have a ripple voltage of 75mv, peak to peak.

S14.9.3.2.2 *Durability tests.* The power supply used in the standard test circuit for conducting durability tests must comply with the following specifications:

(a) Must not generate any adverse transients not present in motor vehicles;

(b) Be capable of supplying 13 vdc and 14 vdc for 12 volt flashers and 6.5 vdc and 7 vdc for 6 volt flashers to the input terminals of the standard test circuit;

(c) Be capable of supplying a continuous output current of the design load for one flasher times the number of flashers and inrush currents as required by the design bulb load complement;

(d) Be capable of supplying an output voltage that does not deviate more than 2% with changes in the static load from 0 to maximum (not including inrush current) and means must be provided to compensate for static input line voltage variations;

(e) Be capable of supplying an output voltage that does not deviate more than 1.0 vdc from 0 to maximum load (including inrush current) and must recover 63% of its maximum excursion within 5 μsec; and

(f) Have a ripple voltage of 300 mv, peak to peak.

S14.9.3.3 *Turn signal flasher starting time test.*

S14.9.3.3.1 *Samples.* Twenty sample flashers chosen from random from fifty representative samples are subjected to a starting time test using the standard test circuit.

S14.9.3.3.2 *Procedure.*

S14.9.3.3.2.1 The test is conducted in an ambient temperature of 75 ± 10 °F with the design load (variable load flashers are tested with their minimum and their maximum design load) connected and the power source for the test circuit adjusted to apply design voltage at the bulbs.

S14.9.3.3.2.2 The time measurement starts when the voltage is initially applied. Compliance is based on an average of three starts for each sample separated by a cooling interval of 5 minutes.

S14.9.3.3.3 *Performance requirements.* The requirements of the starting time test are considered to have been met if 17 of 20 samples comply with the following:

(a) A flasher having normally closed contacts must open (turn off) within 1.0 second for a device designed to operate two signal lamps, or within 1.25 seconds for a device designed to operate more than two lamps, or

(b) A flasher having normally open contacts must complete the first cycle (close the contacts and then open the contacts) within 1.5 seconds.

S14.9.3.4 *Turn signal flasher voltage drop test.*

S14.9.3.4.1 *Samples.* The same twenty sample flashers used in the starting time test are subjected to a voltage drop test using the standard test circuit.

S14.9.3.4.2 *Procedure.*

S14.9.3.4.2.1 The test is conducted in an ambient temperature of 75 ± 10 °F with the design load (variable load flashers are tested with their maximum design load) connected

and the power source for the standard test circuit adjusted to apply 12.8 volts or 6.4 volts at the bulbs according to the flasher rating.

S14.9.3.4.2.2 The voltage drop is measured between the input and load terminals of the flasher during the ''on'' period after the flashers have completed at least five consecutive cycles.

S14.9.3.4.3 *Performance requirements.* The requirements of the voltage drop test are considered to have been met if 17 of 20 samples comply with the lowest voltage drop across any flasher not exceeding 0.80 volt.

S14.9.3.5 *Turn signal flasher flash rate and percent current ''on'' time test.*

S14.9.3.5.1 *Samples.* The same twenty sample flashers used in the voltage drop test are subjected to a flash rate and percent of current ''on'' time test.

S14.9.3.5.2 *Procedure.*

S14.9.3.5.2.1 The test is conducted using the standard test circuit with the design load (variable load flashers are tested with their minimum and their maximum design load) connected and design voltage applied to the bulbs.

S14.9.3.5.2.2 Compliance is determined using the following combinations of ambient temperature and bulb voltage:

(a) 12.8 volts (or 6.4 volts) and 75° ± 10 °F,

(b) 12.0 volts (or 6.0 volts) and 0° ± 5 °F,

(c) 15.0 volts (or 7.5 volts) and 0° ± 5 °F,

(d) 11.0 volts (or 5.5 volts) and 125° ± 5 °F, and

(e) 14.0 volts (or 7.0 volts) and 125° ± 5 °F.

S14.9.3.5.2.3 Flash rate and percent current ''on'' time are measured after the flashers have completed five consecutive cycles and are determined by an average of at least three consecutive cycles.

S14.9.3.5.3 *Performance requirements.* The requirements of the flash rate and percent current ''on'' time test are considered to have been met if 17 of 20 samples comply with the following:

(a) The performance of a normally closed type flasher must be within the unshaded portion of the polygon shown in Figure 2, or

(b) The performance of a normally open type flasher must be within the entire rectangle including the shaded areas shown in Figure 2.

S14.9.3.6 *Turn signal flasher durability test.*

S14.9.3.6.1 *Samples.* Twenty sample flashers chosen from random from the thirty samples not used in the previous tests are subjected to a durability test.

S14.9.3.6.2 *Procedure.*

S14.9.3.6.2.1 Conformance of the samples to the starting time, voltage drop, and flash rate and percent of current ''on'' time tests (limited to the 12.8 volts or 6.4 volts and 75° ± 10 °F test condition only) is established.

S14.9.3.6.2.2 The test is conducted on each sample with the design load (variable load flashers are tested with their maximum design load) connected and 14 volts or 7.0 volts, according to the flasher rating, applied to the input terminals of the standard test circuit.

S14.9.3.6.2.3 The test cycle consists of 15 seconds on followed by 15 seconds off for a total time of 200 hours in an ambient temperature of 75° ± 10 °F.

S14.9.3.6.3 *Performance requirements.* The requirements of the durability test are considered to have been met if, after completion, 17 of 20 samples comply with the performance requirements of the starting time, voltage drop, and flash rate and percent of current ''on'' time tests (limited to the 12.8 volts or 6.4 volts and 75° ± 10 °F test condition only) when tested in the standard test circuit with design load and 12.8 volts (or 6.4 volts) applied to the bulbs.

S14.9.3.7 *Vehicular hazard warning signal flasher starting time test.*

S14.9.3.7.1 *Samples.* Twenty sample flashers chosen from random from fifty representative samples are subjected to a starting time test using the standard test circuit.

S14.9.3.7.2 *Procedure.*

S14.9.3.7.2.1 The test is conducted test in an ambient temperature of 75° ± 10 °F with the minimum and maximum load connected and the power source for the test circuit adjusted to apply design voltage at the bulbs.

S14.9.3.7.2.2 The time measurement starts when the voltage is initially applied.

S14.9.3.7.3 *Performance requirements.* The requirements of the starting time test are considered to have been met if 17 of 20 samples comply with the following:

(a) A flasher having normally closed contacts must open (turn off) within 1.5 seconds after the voltage is applied, or

(b) A flasher having normally open contacts must complete the first cycle (close the contacts and then open the contacts) within 1.5 seconds after the voltage is applied.

S14.9.3.8 *Vehicular hazard warning signal flasher voltage drop test.*

S14.9.3.8.1 *Samples.* The same twenty sample flashers used in the starting time test are subjected to a voltage drop test using the standard test circuit.

S14.9.3.8.2 *Procedure.*

S14.9.3.8.2.1 The test is conducted in an ambient temperature of 75° ± 10 °F with the maximum design load connected and the power source for the test circuit adjusted to apply design voltage at the bulbs.

S14.9.3.8.2.2 The voltage drop is measured between the input and load terminals of the flasher during the ''on'' period after the flashers have completed at least five consecutive cycles.

S14.9.3.8.3 *Performance requirements.* The requirements of the voltage drop test are considered to have been met if 17 of 20 samples comply with the lowest voltage drop across any flasher must not exceed 0.8 volt.

S14.9.3.9 *Vehicular hazard warning signal flasher flash rate and percent ''on'' time test.*

S14.9.3.9.1 *Samples.* The same twenty sample flashers used in the voltage drop test are subjected to a flash rate and percent of current ''on'' time test.

S14.9.3.9.2 *Procedure.*

S14.9.3.9.2.1 The test is conducted using the standard test circuit by and applying loads of from two signal lamps to the maximum design loading including pilot indicator.

S14.9.3.9.2.2 Compliance is determined using the following combinations of ambient temperature and bulb voltage:

(a) 12.8 volts (or 6.4 volts) and 75° ± 10 °F,

(b) 11.0 volts (or 5.5 volts) and 125° ± 5 °F,

(c) 11.0 volts (or 5.5 volts) and 0° ± 5 °F,

(d) 13.0 volts (or 6.5 volts) and 125° ± 5 °F, and

(e) 13.0 volts (or 6.5 volts) and 0° ± 5 °F.

S14.9.3.9.2.3 Flash rate and percent current ''on'' time are measured after the flashers have completed five consecutive cycles and are determined by an average of at least three consecutive cycles.

S14.9.3.9.3 *Performance requirements.* The requirements of the flash rate and percent current ''on'' time test are considered to have been met if 17 of 20 samples comply with the following:

(a) The performance of a normally closed type flasher must be within the unshaded portion of the polygon shown in Figure 2, or

(b) The performance of a normally open type flasher must be within the entire rectangle including the shaded areas shown in Figure 2.

S14.9.3.10 *Vehicular hazard warning signal flasher durability test.*

S14.9.3.10.1 *Samples.* Twenty sample flashers chosen from random from the thirty samples not used in the previous tests are subjected to a durability test.

S14.9.3.10.2 *Procedure.*

S14.9.3.10.2.1 Conformance of the samples to the starting time, voltage drop, and flash rate and percent of current ''on'' time tests (limited to the 12.8 volts or 6.4 volts and 75° ± 10 °F test condition only) is established.

S14.9.3.10.2.2 The test is conducted on each sample with the maximum design load connected and 13.0 volts (or 6.5 volts) applied to the input terminals of the standard test circuit.

S14.9.3.10.2.3 The flasher is subjected to continuous flashing for a total time of 36 hours in an ambient temperature of 75° ± 10 °F.

S14.9.3.10.3 *Performance requirements.* The requirements of the durability test are considered to have been met if, after completion, 17 of 20 samples comply with the performance requirements of the starting time, voltage drop, and flash rate and percent of current ''on'' time tests (limited to the 12.8 volts or 6.4 volts and 75° ± 10 °F test condition only) when tested in the standard test circuit with the power source adjusted to provide design voltage to the bulbs and with a minimum load of two signal lamp bulbs and the maximum design load, including pilot lamps, as specified by the manufacturer at an ambient temperature of 75° ± 10 °F.

S14.9.3.11 *Semiautomatic headlamp beam switching device tests.*

S14.9.3.11.1 *Test conditions.* All tests are conducted with 13 volts input to the device unless otherwise specified.

S14.9.3.11.2 *Sensitivity test.*

S14.9.3.11.2.1 *Samples.* The sample device is mounted in and operated in the laboratory in the same environment as that encountered on the vehicle, that is tinted glass, grille work, etc.

S14.9.3.11.2.2 *Procedure.*

S14.9.3.11.2.2.1 The sample device is adjusted for sensitivity in accordance with the manufacturer's instructions. It is exposed to a light source capable of providing a variable intensity of at least 1.5 cd to 150 cd at 100 feet from the sample device.

S14.9.3.11.2.2.2 The device is switched to the lower beam mode in accordance with the ''dim'' limits specified and switched back to the upper beam mode in accordance with the ''hold'' limits specified for the specified test positions.

S14.9.3.11.2.2.3 To provide more complete information on sensitivity throughout the required vertical and horizontal angles, a set of constant footcandle curves are made at ''dim'' sensitivities of 17, 25, and 100 cd at 100 ft.

S14.9.3.11.2.3 *Performance requirements.*

S14.9.3.11.2.3.1 *Operating limits.*

Test position (degrees)	Dim (cd at 100 ft)	Hold (cd at 100 ft)
H V	Adjust to 15	1.5 min to 3.75 max.
H 2L	25 max	1.5 min.
H 4L	40 max	1.5 min.
H 6L	75 max	1.5 min.
H 2R	25 max	1.5 min.
H 5R	150 max to 40 min	1.5 min.
1D V	30 max	1.5 min.
1U V	30 max	1.5 min.

S14.9.3.11.2.3.2 There must be no sensitivity voids shown in the constant footcandle curves within the area limited by the test positions.

S14.9.3.11.3 *Voltage regulation test.*

S14.9.3.11.3.1 *Procedure.*

S14.9.3.11.3.1.1 The sensitivity of the sample device is adjusted so that it complies with the sensitivity test.

S14.9.3.11.3.1.2 The ''dim'' sensitivity is measured at the H–V test position at 11 volts input to the device and at 15 volts input to the device.

S14.9.3.11.3.2 *Performance requirements.* The device must switch to the lower beam mode at between 8 (cd at 100 ft) and 25 (cd at 100 ft) with the input voltage at 11 volts and at 15 volts.

S14.9.3.11.4 *Manual override test.*

S14.9.3.11.4.1 *Procedure.*

S14.9.3.11.4.1.1 The sensitivity of the sample device is adjusted so that it complies with the sensitivity test.

S14.9.3.11.4.1.2 The device is exposed to a test light that causes it to switch to the lower beam mode.

S14.9.3.11.4.1.3 The manufacturer's instructions are followed to cause the device to override the test light and switch to upper beam.

S14.9.3.11.4.1.4 In a similar manner, the test light is extinguished to cause the device to switch to the upper beam mode.

S14.9.3.11.4.1.5 Again the manufacturer's instructions are followed to cause the device to switch to lower beam.

S14.9.3.11.4.2 *Performance requirements.* The device, when operated in accordance with the manufacturer's instructions, must switch to the opposite beam with the test light energized and with the test light extinguished.

S14.9.3.11.5 *Warmup test.*

S14.9.3.11.5.1 *Procedure.*

S14.9.3.11.5.1.1 The sensitivity of the sample device is adjusted so that it complies with the sensitivity test and the test lamp extinguished.

S14.9.3.11.5.1.2 The test lamp will then be energized at a level of 25 (cd at 100 ft) at the H–V position of the device and the time for the device to switch to lower beam is measured.

S14.9.3.11.5.2 *Performance requirements.* If the warmup time of the device exceeds 10 seconds it shall maintain the headlamps on lower beam during warmup.

S14.9.3.11.6 *Temperature test.*

S14.9.3.11.6.1 *Procedure.*

S14.9.3.11.6.1.1 The sample device is exposed for 1 hour in a temperature corresponding to that at the device mounting location.

S14.9.3.11.6.1.2 For a device mounted in the passenger compartment or the engine compartment, the temperature is 210 °F, mounted elsewhere, the temperature is 150 °F.

S14.9.3.11.6.1.3 After this exposure the H–V ''dim'' sensitivity of the sample device is measured over the temperature range of −30 °F to +100 °F.

S14.9.3.11.6.2 *Performance requirements.* The device must switch to the lower beam mode between 8 (cd at 100 ft) and 25 (cd at 100 ft) over the temperature range of −30 °F to +100 °F.

S14.9.3.11.7 *Dust test.*

S14.9.3.11.7.1 *Procedure.*

S14.9.3.11.7.1.1 The sensitivity of the sample device is adjusted so that it complies with the sensitivity test.

S14.9.3.11.7.1.2 The device is then subjected to the dust test of S14.5.3.

S14.9.3.11.7.1.3 At the conclusion of the dust exposure the lens of the device must be wiped clean and the H–V ''dim'' sensitivity of the sample device is measured.

S14.9.3.11.7.2 *Performance requirements.* The device must switch to the lower beam mode between 8 (cd at 100 ft) and 25 (cd at 100 ft).

S14.9.3.11.8 *Corrosion test.*

S14.9.3.11.8.1 *Procedure.*

S14.9.3.11.8.1.1 The sensitivity of the sample device is adjusted so that it complies with the sensitivity test.

S14.9.3.11.8.1.2 All system components located outside the passenger compartment must be subjected to the corrosion test of S14.5.4 with the device not operating.

S14.9.3.11.8.1.3 Water is not permitted to accumulate on any connector socket.

S14.9.3.11.8.1.4 At the conclusion of the test the H–V ''dim'' sensitivity of the sample device must be measured.

S14.9.3.11.8.2 *Performance requirements.* The sample device must switch to the lower beam mode between 8 (cd at 100 ft) and 25 (cd at 100 ft).

S14.9.3.11.9 *Vibration test.*

S14.9.3.11.9.1 *Procedure.*

S14.9.3.11.9.1.1 The sensitivity of the sample device is adjusted so that it complies with the sensitivity test and the mechanical aim of the photounit determined.

S14.9.3.11.9.1.2 The sample device must be mounted in proper vehicle position and subjected to vibration of 5g constant acceleration for ½ hour in each of three directions: vertical; horizontal and parallel to the vehicle longitudinal axis; and horizontal and normal to the vehicle longitudinal axis.

S14.9.3.11.9.1.3 The vibration frequency must be varied from 30 to 200 and back to 30 cycles per second over a period of approximately 1 minute.

S14.9.3.11.9.1.4 The device must be operating during the test.

S14.9.3.11.9.1.5 At the conclusion of the test the H–V ''dim'' sensitivity of the sample device and the mechanical aim of the photounit must be measured.

S14.9.3.11.9.2 *Performance requirements.*

S14.9.3.11.9.2.1 The sample device must switch to the lower beam mode between 8 (cd at 100 ft) and 25 (cd at 100 ft).

S14.9.3.11.9.2.2 The mechanical aim of the device photounit must not have changed by more than 0.25° from the initial value.

S14.9.3.11.10 *Sunlight test.*

S14.9.3.11.10.1 *Procedure.*

S14.9.3.11.10.1.1 The sample device must be exposed for 1 hour in bright noonday sunlight (5000 fc minimum illumination with a clear sky) with the photounit aimed as it would be in service and facing an unobstructed portion of the horizon in the direction of the sun.

S14.9.3.11.10.1.2 The device must then be rested for 1 hour in normal room light at room temperature and the H–V ''dim'' sensitivity of the sample device is measured.

S14.9.3.11.10.2 *Performance requirements.* The sample device must switch to the lower beam mode between 8 (cd at 100 ft) and 25 (cd at 100 ft).

S14.9.3.11.11 *Durability test.*

S14.9.3.11.11.1 *Procedure.*

S14.9.3.11.11.1.1 The sensitivity of the sample device is adjusted so that it complies with the sensitivity test.

S14.9.3.11.11.1.2 The device photounit operated at a 13.0 input voltage on a cycle of 90 minutes on and 30 minutes off must be activated by a 60 cd light source at 100 ft, or equivalent, which is cycled on and off 4 times per minute for a period of 200 hours.

S14.9.3.11.11.1.3 The device must then rest for 2 hours in a lighted area of 50 to 150 fc after which the H–V ''dim'' sensitivity must be measured.

S14.9.3.11.11.2 *Performance requirements.* The sample device must switch to the lower beam mode between 8 (cd at 100 ft) and 25 (cd at 100 ft).

S14.9.3.11.12 *Return to upper beam test.*

S14.9.3.11.12.1 *Procedure.*

S14.9.3.11.12.1.1 The sensitivity of the sample device is adjusted so that it complies with the sensitivity test.

S14.9.3.11.12.1.2 The lens of the photounit must be exposed to light of 100 fc for 10 seconds.

S14.9.3.11.12.2 *Performance requirements.* The sample device must switch to upper beam mode within 2 seconds after the 100 fc light is extinguished.

TABLE I–a—REQUIRED LAMPS AND REFLECTIVE DEVICES

Lighting device	Number and color	Mounting location	Mounting height	Device activation
All Passenger Cars, Multipurpose Passenger Vehicles (MPV), Trucks, and Buses				
Lower Beam Headlamps.	White, of a headlighting system listed in Table II.	On the front, at the same height, symmetrically about the vertical centerline, as far apart as practicable.	Not less than 55.9 cm nor more than 137.2 cm. The wiring harness or connector assembly of each headlighting system must be designed so that only those light sources intended for meeting lower beam photometrics are energized when the beam selector switch is in the lower beam position, and that only those light sources intended for meeting upper beam photometrics are energized when the beam selector switch is in the upper beam position, except for certain systems listed in Table II. Steady burning, except that may be flashed for signaling purposes.	

TABLE I–a—REQUIRED LAMPS AND REFLECTIVE DEVICES—Continued

Lighting device	Number and color	Mounting location	Mounting height	Device activation
Upper Beam Headlamps.	White, of a headlighting system listed in Table II.	On the front, at the same height, symmetrically about the vertical centerline, as far apart as practicable.	Not less than 55.9 cm nor more than 137.2 cm.	
Turn Signal Lamps ...	2 Amber	At or near the front, at the same height, symmetrically about the vertical centerline, as far apart as practicable.	Not less than 15 inches, nor more than 83 inches.	Flash when the turn signal flasher is actuated by the turn signal operating unit.
	2 Amber or red Truck tractor exception, see S6.1.1.3.	On the rear, at the same height, symmetrically about the vertical centerline, as far apart as practicable.		
Taillamps	2 Red	On the rear, at the same height, symmetrically about the vertical centerline, as far apart as practicable.	Not less than 15 inches, nor more than 72 inches.	Steady burning. Must be activated when the headlamps are activated in a steady burning state or the parking lamps on passenger cars and MPVs, trucks, and buses less than 80 inches in overall width are activated. May be activated when the headlamps are activated at less than full intensity as Daytime Running Lamps (DRL).
Stop Lamps	2 Red	On the rear, at the same height, symmetrically about the vertical centerline, as far apart as practicable.	Not less than 15 inches, nor more than 72 inches.	Steady burning. Must be activated upon application of the service brakes. When optically combined with a turn signal lamp, the circuit must be such that the stop signal cannot be activated if the turn signal lamp is flashing. May also be activated by a device designed to retard the motion of the vehicle.
Side Marker Lamps ..	2 Amber	On each side as far to the front as practicable.	Not less than 15 inches.	Steady burning except may be flashed for signaling purposes. Must be activated when the headlamps are activated in a steady burning state or the parking lamps on passenger cars and MPVs, trucks, and buses less than 80 inches in overall width are activated.
	2 Red (not required on truck tractor).	On each side as far to the rear as practicable.		
Reflex Reflectors	On each side as far to the front as practicable.	2 Amber	Not less than 15 inches, nor more than 60 inches.	Not applicable.
	2 Red (not required on truck tractor).	On each side as far to the rear as practicable.		

TABLE I–a—REQUIRED LAMPS AND REFLECTIVE DEVICES—Continued

Lighting device	Number and color	Mounting location	Mounting height	Device activation
	2 Red	On the rear, at the same height, symmetrically about the vertical centerline, as far apart as practicable. On a truck tractor may be mounted on the back of the cab not less than 4 inches above the height of the rear tires.		
Backup Lamp	1 White. Additional lamps permitted to meet requirements.	On the rear.	No requirement.	Steady burning. Must be activated when the ignition switch is energized and reverse gear is engaged. Must not be energized when the vehicle is in forward motion.
License Plate Lamp	1 White. Additional lamps permitted to meet requirements.	On the rear to illuminate license plate from top or sides.	No requirement.	Steady burning. Must be activated when the headlamps are activated in a steady burning state or when the parking lamps on passenger cars and MPVs, trucks, and buses less than 80 inches in overall width are activated.
Additional Lamps Required on All Passenger Cars, and on Multipurpose Passenger Vehicles (MPV), Trucks, and Buses, Less Than 2032 MM in Overall Width				
Parking lamps	2 Amber or white.	On the front, at the same height, symmetrically about the vertical centerline, as far apart as practicable.	Not less than 15 inches, nor more than 72 inches.	Steady burning. Must be activated when the headlamps are activated in a steady burning state.
Additional Lamp(s) Required on All Passenger Cars, and on Multipurpose Passenger Vehicles (MPV), Trucks, and Buses, Less Than 2032 MM in Overall Width and With a GVWR of 10,000 LBS or Less				
High mounted stop lamp.	1 Red, or 2 red where exceptions apply. See Section 6.1.1.2.	On the rear including glazing, with the lamp center on the vertical centerline as viewed from the rear.	Not less than 34 inches except for passenger cars. See Section 6.1.4.1.	Steady burning. Must only be activated upon application of the service brakes or by a device designed to retard the motion of the vehicle.
Additional Lamps and Reflective Devices Required on All Passenger Cars, Multipurpose Passenger Vehicles (MPV), Trucks, and Buses, 30 Feet or Longer				
Intermediate side marker lamps.	2 Amber	On each side located at or near the midpoint between the front and rear side marker lamps.	Not less than 15 inches.	Steady burning except may be flashed for signaling purposes. Must be activated when the headlamps are activated in a steady burning state or when the parking lamps on passenger cars and MPVs, trucks, and buses less than 80 inches in overall width are activated.
Intermediate side reflex reflectors.	2 Amber	On each side located at or near the midpoint between the front and rear side reflex reflectors.	Not less than 15 inches, nor more than 60 inches.	Not applicable.

TABLE I–a—REQUIRED LAMPS AND REFLECTIVE DEVICES—Continued

Lighting device	Number and color	Mounting location	Mounting height	Device activation
Additional Lamps Required on All Multipurpose Passenger Vehicles (MPV), Truck, and Buses, 2032 MM or More in Overall Width				
Clearance lamps	2 Amber	On the front to indicate the overall width of the vehicle, or width of cab on truck tractor, at the same height, symmetrically about the vertical centerline.	As near the top as practicable.	Steady burning.
	May be located at a location other than the front if necessary to indicate the overall width of the vehicle, or for protection from damage during normal operation of the vehicle.			
	2 Red (not required on truck tractor).	On the rear to indicate the overall width of the vehicle, at the same height, symmetrically about the vertical centerline. May be located at a location other than the rear if necessary to indicate the overall width of the vehicle, or for protection from damage during normal operation of the vehicle.	As near the top as practicable, except where the rear identification lamps are mounted at the extreme height of the vehicle. Practicability of locating lamps on the vehicle header is presumed when the header extends at least 25 mm (1 inch) above the rear doors.	Steady burning.
Additional Lamps Required on All Multipurpose Passenger Vehicles (MPV), Truck, and Buses, 2032 MM or More in Overall Width				
Identification lamps ...	3 Amber	On the front, at the same height, as close as practicable to the vertical centerline, with lamp centers spaced not less than 6 inches or more than 12 inches apart.	As near the top of the vehicle or top of the cab as practicable.	Steady burning.
	3 Red (not required on truck tractor).	On the rear, at the same height, as close as practicable to the vertical centerline, with lamp centers spaced not less than 6 inches or more than 12 inches apart.	As near the top as practicable. Practicability of locating lamps on the vehicle header is presumed when the header extends at least 25 mm (1 inch) above the rear doors.	Steady burning.

TABLE I–a—REQUIRED LAMPS AND REFLECTIVE DEVICES—Continued

Lighting device	Number and color	Mounting location	Mounting height	Device activation
Additional Lamps Required on All School Buses Except Multifunction School Activity Buses				
Signal warning lamps	2 Red plus 2 amber optional.	On the front of the cab as far apart as practicable, but in no case shall the spacing between lamps be less than 40 inches. Amber lamps, when installed, at the same height as and just inboard of the red lamp..	As high as practicable but at least above the windshield.	Flashing alternately between 60 to 120 cycles per minute, with an activation period sufficient to allow the lamp to reach full brightness, when actuated by a manual switch. Amber lamps, when installed, may only be activated by manual or foot operation, and must be automatically deactivated and the red lamps must be automatically activated when the bus entrance door is opened.
	2 Red plus 2 amber optional.	On the rear cab as far apart as practicable, but in no case shall the spacing between lamps be less than 40 inches. Amber lamps, when installed, at the same height as and just inboard of the red lamp.	As high as practicable but at least above the top of any side window opening.	Flashing alternately between 60 to 120 cycles per minute, with an activation period sufficient to allow the lamp to reach full brightness, when actuated by a manual switch. Amber lamps, when installed, may only be activated by manual or foot operation, and must be automatically deactivated and the red lamps must be automatically activated when the bus entrance door is opened.
Daytime Running Lamps Permitted But Not Required on Passenger Cars, Multipurpose Passenger Vehicles (MPV), Trucks, and Buses				
Daytime running lamp (DRL).	2 identically colored either white, white to yellow, white to selective yellow, selective yellow, or yellow.	On the front, symmetrically disposed about the vertical centerline if not a pair of lamps required by this standard or if not optically combined with a pair of lamps required by this standard.	Not more than 1.067 meters above the road surface if not a pair of lamps required by this standard or if not optically combined with a pair of lamps required by this standard. See S7.10.13(b) for additional height limitation.	Steady burning. Automatically activated as determined by the vehicle manufacturer and automatically deactivated when the headlamp control is in any ''on'' position. Each DRL optically combined with a turn signal lamp must be automatically deactivated as a DRL when the turn signal lamp or hazard warning lamp is activated, and automatically reactivated as a DRL when the turn signal lamp or hazard warning lamp is deactivated.
				See S7.10.10.1(c) for additional activation requirements when mounted close to, or combined with, a turn signal lamp.

TABLE I–b—REQUIRED LAMPS AND REFLECTIVE DEVICES

Lighting device	Number and color	Mounting location	Mounting height	Device activation
All Trailers				
Turn Signal Lamps ...	2 Red or amber	On the rear, at the same height, symmetrically about the vertical centerline, as far apart as practicable.	Not less than 15 inches, nor more than 83 inches.	Flash when the turn signal flasher is actuated by the turn signal operating unit.

TABLE I–b—REQUIRED LAMPS AND REFLECTIVE DEVICES—Continued

Lighting device	Number and color	Mounting location	Mounting height	Device activation
Taillamps	2 Red or 1 red on trailers less than 30 inches wide.	On the rear, at the same height, symmetrically about the vertical centerline, as far apart as practicable. When a single lamp is installed it must be mounted at or near the vertical centerline.	Not less than 15 inches, nor more than 72 inches.	Steady burning.
Stop Lamps	2 Red, or 1 red on trailers less than 30 inches wide.	On the rear, at the same height, symmetrically about the vertical centerline, as far apart as practicable. When a single lamp is installed it must be mounted at or near the vertical centerline.	Not less than 15 inches, nor more than 72 inches.	Steady burning. Must be activated upon application of the service brakes. When optically combined with a turn signal lamp, the circuit must be such that the stop signal cannot be activated if the turn signal lamp is flashing. May also be activated by a device designed to retard the motion of the vehicle.
Side Marker Lamps	2 Amber. None required on trailers less than 1829 mm [6 ft] in overall length including the trailer tongue. 2 Red	On each side as far to the front as practicable exclusive of the trailer tongue. On each side as far to the rear as practicable.	Not less than 15 inches. Not less than 15 inches. Not more than 60 inches on trailers 2032 mm or more in overall width.	Steady burning except may be flashed for signaling purposes.
Reflex Reflectors. A trailer equipped with a conspicuity treatment in conformance with S8.2 of this standard need not be equipped with reflex reflectors if the conspicuity material is placed at the locations of the required reflex reflectors.	2 Amber. None required on trailers less than 1829 mm [6 ft] in overall length including the trailer tongue. 2 Red 2 Red or 1 red on trailers less than 30 inches wide	On each side as far to the front as practicable exclusive of the trailer tongue. On each side as far to the rear as practicable. On the rear, at the same height, symmetrically about the vertical centerline, as far apart as practicable. When a single reflector is installed it must be mounted at or near the vertical centerline.	Not less than 15 inches, nor more than 60 inches.	Not applicable.
License Plate Lamp	1 White Additional lamps permitted to meet requirements.	On the rear to illuminate license plate from top or sides.	No requirement	Steady burning.

TABLE I–b—REQUIRED LAMPS AND REFLECTIVE DEVICES—Continued

Lighting device	Number and color	Mounting location	Mounting height	Device activation
Additional Lamps and Reflective Devices Required on all Trailers 30 Feet or Longer				
Intermediate side marker lamps.	2 Amber	On each side located at or near the midpoint between the front and rear side marker lamps.	Not less than 15 inches.	Steady burning except may be flashed for signaling purposes.
Intermediate side reflex reflectors. A trailer equipped with a conspicuity treatment in conformance with S8.2 of this standard need not be equipped with reflex reflectors if the conspicuity material is placed at the locations of the required reflex reflectors.	2 Amber	On each side located at or near the midpoint between the front and rear side reflex reflectors.	Not less than 15 inches, nor more than 60 inches.	Not applicable.
Additional Lamps Required on all Trailers 2032 MM or More in Overall Width				
Clearance lamps	2 Amber	On the front to indicate the overall width of the vehicle, at the same height, symmetrically about the vertical centerline. May be located at a location other than the front if necessary to indicate the overall width of the vehicle, or for protection from damage during normal operation of the vehicle.	As near the top as practicable.	Steady burning.
	2 Red	On the rear to indicate the overall width of the vehicle, at the same height, symmetrically about the vertical centerline. May be located at a location other than the rear if necessary to indicate the overall width of the vehicle, or for protection from damage during normal operation of the vehicle.	As near the top as practicable, except where the rear identification lamps are mounted at the extreme height of the vehicle. Practicability of locating lamps on the vehicle header is presumed when the header extends at least 25 mm (1 inch) above the rear doors.	Steady burning.

TABLE I–b—REQUIRED LAMPS AND REFLECTIVE DEVICES—Continued

Lighting device	Number and color	Mounting location	Mounting height	Device activation
	2 Amber to front and red to rear.	On a boat trailer the requirement for front and rear clearance lamps may be met by installation at or near the midpoint on each side of a dual facing lamp so as to indicate the extreme width. May be located at a location other than the front and the rear if necessary to indicate the overall width of the vehicle, or for protection from damage during normal operation of the vehicle.	As near the top as practicable.	Steady burning.
Identification lamps ...	3 Red	On the rear, at the same height, as close as practicable to the vertical centerline, with lamp centers spaced not less than 6 inches or more than 12 inches apart.	As near the top as practicable. Practicability of locating lamps on the vehicle header is presumed when the header extends at least 25 mm (1 inch) above the rear doors.	Steady burning.

TABLE I–c—REQUIRED LAMPS AND REFLECTIVE DEVICES

Lighting device	Number and color	Mounting location	Mounting height	Device activation
		All Motorcycles		
Lower Beam Headlamps.	White, of a headlighting system listed in S10.17.	On the front, at the same height, symmetrically about the vertical centerline, as far apart as practicable. See additional requirements in S6.1.4.2.1.3, S10.17.1.1, S10.17.1.2, and S10.17.1.3.	Not less than 55.9 cm nor more than 137.2 cm	The wiring harness or connector assembly of each headlighting system must be designed so that only those light sources intended for meeting lower beam photometrics are energized when the beam selector switch is in the lower beam position, and that only those light sources intended for meeting upper beam photometrics are energized when the beam selector switch is in the upper beam position, except for certain systems listed in Table II. Steady burning, except that may be flashed for signaling purposes. The upper beam or the lower beam, but not both, may be wired to modulate from a higher intensity to a lower intensity in accordance with S10.17.5.

TABLE I–c—REQUIRED LAMPS AND REFLECTIVE DEVICES—Continued

Lighting device	Number and color	Mounting location	Mounting height	Device activation
Upper Beam Headlamps.	White, of a headlighting system listed in S10.17.	On the front, at the same height, symmetrically about the vertical centerline, as far apart as practicable.	Not less than 55.9 cm nor more than 137.2 cm.	
Turn Signal Lamps	2 Amber. None required on a motor driven cycle whose speed attainable in 1 mile is 30 mph or less.	At or near the front, at the same height, symmetrically about the vertical centerline, and having a minimum horizontal separation distance (centerline of lamps) of 16 inches. Minimum edge to edge separation distance between a turn signal lamp and headlamp is 4 inches.	Not less than 15 inches, nor more than 83 inches.	Flash when the turn signal flasher is actuated by the turn signal operating unit.
	2 Amber or red. None required on a motor driven cycle whose speed attainable in 1 mile is 30 mph or less.	At or near the rear, at the same height, symmetrically about the vertical centerline, and having a minimum horizontal separation distance (centerline to centerline of lamps) of 9 inches. Minimum edge to edge separation distance the turn signal lamp and the taillamp or stop lamp is 4 inches, when a single stop and taillamp is installed on the vertical centerline and the turn signal lamps are red.		
Taillamps	1 Red	On the rear, on the vertical centerline except that if two are used, they must be symmetrically disposed about the vertical centerline.	Not less than 15 inches, nor more than 72 inches.	Steady burning. Must be activated when the headlamps are activated in a steady burning state.
Stop Lamps	1 Red	On the rear, on the vertical centerline except that if two are used, they must be symmetrically disposed about the vertical centerline.	Not less than 15 inches, nor more than 72 inches.	Steady burning. Must be activated upon application of the service brakes. When optically combined with a turn signal lamp, the circuit must be such that the stop signal cannot be activated if the turn signal lamp is flashing. May also be activated by a device designed to retard the motion of the vehicle.
Reflex Reflectors	2 Amber	On each side as far to the front as practicable.	Not less than 15 inches, nor more than 60 inches.	Not applicable.
	2 Red	On each side as far to the rear as practicable.		
	1 Red	On the rear, on the vertical centerline except that, if two are used on the rear, they must be symmetrically disposed about the vertical centerline.		
License Plate Lamp	1 White. Additional lamps permitted to meet requirements.	On the rear to illuminate license plate.	No requirement.	Steady burning. Must be activated when the headlamps are activated in a steady burning state.

TABLE II-a: HEADLIGHTING SYSTEMS-SEALED BEAMS

SYSTEM DESIGNATION	UNIT NOMINAL SIZE	NUMBER OF HEADLAMPS	HEADLAMP DESIGNATION	BEAM COMPOSITION	PHOTOMETRY REQUIREMENTS REFERENCE			MAXIMUM FILAMENT POWER AT 12.8 V	
					TABLE XVIII	TABLES XIX-A, XIX-b, XIX-c			
					UPPER BEAM MECHANICAL AND VISUAL AIM	LOWER BEAM MECH AIM	LOWER BEAM VISUAL AIM	UPPER BEAM	LOWER BEAM
TYPE A	100x165 mm	2	1A1	1 UB FILAMENT	UB4	N.A.	N.A.	55	N.A.
		2	2A1	1 UB & 1 LB FILAMENTS	UB5	LB4M	LB2V	43	65
TYPE B	142x200 mm	2	2B1	1 UB & 1 LB FILAMENTS	UB3	LB3M	LB3V	70	60
TYPE C	146 mm DIA.	2	1C1	1 UB FILAMENT	UB4	N.A.	N.A.	55	N.A.
		2	2C1	1 UB & 1 LB FILAMENTS	UB5	LB4M	LB2V	43	65
TYPE D	178 mm DIA.	2	2D1	1 UB & 1 LB FILAMENTS	UB3	LB3M	LB3V	65	55
TYPE E	100x165 mm	2	2E1	1 UB & 1 LB FILAMENTS	UB3	LB3M	LB3V	70	60
TYPE F[2]	92x150 mm	2	UF	1 UB FILAMENT	UB1	N.A.	N.A.	70	N.A.
		2	LF	1 LB FILAMENT	N.A[1]	LB1M[1]	LB1V[1]	N.A.	60
TYPE G		2	1G1	1 UB FILAMENT	UB4	N.A.	N.A.	55	N.A.
		2	2G1	1 UB & 1 LB FILAMENTS	UB5	LB4M	LB2V	43	65
TYPE H		2	2H1	1 UB & 1 LB FILAMENTS	UB3	LB3M	LB3V	70	60

[1] Headlamps marked "LF" may remain activated when headlamps marked "UF" are activated.

[2] Type F headlamps may be mounted on common or parallel seating and aiming planes to permit simultaneous aiming with restrictions. See S10.13.2.

TABLE II–b.—HEADLIGHTING SYSTEMS—COMBINATION

System designation	System composition	Photometry requirements reference		
		Table XVIII	Tables XIX–a, XIX–b, XIX–c	
		Upper beam mechanical and visual aim	Lower beam mech aim	Lower beam visual aim
2 LAMP SYSTEM.	A COMBINATION OF TWO DIFFERENT HEADLAMPS CHOSEN FROM; TYPE F, AN INTEGRAL BEAM HEADLAMP, OR A REPLACEABLE BULB HEADLAMP.	UB2 (1)	LB2M (1)	LB2V (1)
4 LAMP SYSTEM.	ANY COMBINATION OF FOUR DIFFERENT HEADLAMPS CHOSEN FROM; TYPE F, AN INTEGRAL BEAM HEADLAMP (3), OR A REPLACEABLE BULB HEADLAMP.	UB1	LB1M (2)	LB1V (2)

(1) Headlamps designed to conform to the photometry requirements of UB2 and LB2M or LB2V may allow the lower beam light source(s) to remain activated when an upper beam light source is activated if the lower beam light source(s) contribute to upper beam photometric compliance.
(2) Lower beams may remain activated when upper beams are activated.
(3) Beam contributor photometric allocation formula of S14.2.5.9 may apply.

TABLE II–c.—HEADLIGHTING SYSTEMS—INTEGRAL BEAMS

System designation	Beam composition	Photometry requirements reference		
		Table XVIII	Tables XIX–a, XIX–b, XIX–c	
		Upper beam mechanical and visual aim	Lower beam mech aim	Lower beam visual aim
2 LAMP SYSTEM.	UPPER BEAM & LOWER BEAM	UB2 (1) OR UB3	LB2M (1) OR LB3M.	LB2V (1) OR LB3V
4 LAMP SYSTEM.	UPPER BEAM	UB4	N.A.	N.A.
	UPPER BEAM & LOWER BEAM	UB5	LB4M	LB2V
4 LAMP SYSTEM.	UPPER BEAM (U)	UB1	N.A.	N.A.
	LOWER BEAM (L)	N.A. (2)	LB1M (2)	LB1V (2)
4 LAMP SYSTEM.	UPPER BEAM	UB6	N.A.	N.A.
	LOWER BEAM	N.A. (3)	LB5M (3)	LB4V (3)
BEAM CONTRIBUTOR.	UPPER BEAM & LOWER BEAM	UB1 (4)	LB1M (2)(4)	LB1V (2)(4)

(1) Headlamps designed to conform to the photometry requirements of UB2 and LB2M or LB2V may allow the lower beam light source(s) to remain activated when an upper beam light source is activated if the lower beam light source(s) contribute to upper beam photometric compliance.
(2) Lower beams may remain activated when upper beams are activated.
(3) Lower beams must remain activated when upper beams are activated.
(4) Beam contributor photometric allocation formula of S14.2.5.9 applies.

TABLE II–d.—HEADLIGHTING SYSTEMS—REPLACEABLE BULB

System designation	Light source composition	Photometry requirements reference		
		Table XVIII	Tables XIX–a, XIX–b, XIX–c	
		Upper beam mechanical and visual aim	Lower beam mech aim	Lower beam visual aim
2 LAMP SYSTEM	ANY DUAL FILAMENT TYPE, OTHER THAN HB2, USED ALONE OR WITH ANOTHER DUAL FILAMENT TYPE OTHER THAN HB2.	UB2 (1) OR UB3	LB2M (1) OR LB3M.	LB2V (1) OR LB3V
2 LAMP SYSTEM	HB2 OR ANY SINGLE FILAMENT TYPE USED ALONE OR WITH ANY OTHER SINGLE OR DUAL FILAMENT TYPE.	UB2 (1) OR UB3	LB2M (1)	LB2V (1)

TABLE II–d.—HEADLIGHTING SYSTEMS—REPLACEABLE BULB—Continued

System designation	Light source composition	Photometry requirements reference		
		Table XVIII	Tables XIX–a, XIX–b, XIX–c	
		Upper beam mechanical and visual aim	Lower beam mech aim	Lower beam visual aim
4 LAMP SYSTEM	ANY DUAL FILAMENT TYPE, OTHER THAN HB2, USED ALONE OR WITH ANOTHER DUAL FILAMENT TYPE OTHER THAN HB2.	UB1 (2) OR UB3	LB1M (2) OR LB3M.	LB1V (2) OR LB3V
4 LAMP SYSTEM	HB2 OR ANY SINGLE FILAMENT TYPE USED ALONE OR WITH ANY OTHER SINGLE OR DUAL FILAMENT TYPE. (U & L).	UB1 (2)	LB1M (2)	LB1V (2)

(1) Headlamps designed to conform to the photometry requirements of UB2 and LB2M or LB2V may allow the lower beam light source(s) to remain activated when an upper beam light source is activated if the lower beam light source(s) contribute to upper beam photometric compliance.
(2) Lower beams may remain activated when upper beams are activated.

TABLE III—MARKING REQUIREMENTS LOCATION

Lamp, reflective device, or other component	Marking	Marking location	Requirement
Headlamps, Beam Contributors, or Headlamp Replaceable Lens.	"DOT"	Lens	S6.5.1
	Optical axis marking	See requirement	S10.18.5
	Manufacturer name and/or trademark	Lens	S6.5.3
	Voltage	See requirement	S6.5.3
	Part number or trade number	See requirement	S6.5.3
Headlamp Replaceable Lens	Manufacturer identification	Lens	S13.3
	Headlamp identification		
Replaceable Bulb Headlamps	"U" or "L" (4 lamp system)	Lens	S10.15.4
	Replaceable bulb type	Lens	S6.5.4.3
Sealed Beam Headlamps	"Sealed Beam"	Lens	S6.5.3.3
	Type designation		
Integral Beam Headlamps	"U" or "L" (4 lamp system)	Lens	S10.14.4
Motorcycle Headlamps	"motorcycle"	Lens	S10.17.2
Visually/Optically Aimed Headlamps	"VOR" or "VOL" or "VO"	Lens	S10.18.9.6
Externally Aimed Headlamps	Aim pad location & "H" or "V"	Lens	S10.18.7.1
Vehicle Headlamp Aiming Devices (VHAD).	Aiming scale(s)	See requirement	S10.18.8
(Headlamp) Replaceable Light Sources	"DOT"	See requirement	S11.1
	Replaceable light source designation	See requirement.	
	Manufacturer name and/or trademark	See requirement.	
Replaceable Light Source Ballasts	Manufacturer name or logo	See requirement	S11.2
	Part number.		
	Light source identification.		
	Rated laboratory life.		
	High voltage warning.		
	Output in watts and volts.		
	"DOT".		
Lamps (Other Than Headlamps), Reflective Devices, and Associated Equipment.	"DOT"	See requirement	S6.5.1.2
Daytime Running Lamps (DRL)	"DRL"	Lens	S6.5.2
Conspicuity Reflex Reflectors	"DOT–C"	Exposed surface	S8.2.2.1
Retroreflective Sheeting	"DOT–C2" or "DOT–C3" or "DOT–C4".	Exposed surface	S8.2.1.3

TABLE IV–a.—EFFECTIVE PROJECTED LUMINOUS LENS AREA REQUIREMENTS

Lighting device	Passenger cars, multipurpose passenger vehicles, trucks, trailers, and buses of less than 2032 MM in overall width—Minimum effective projected luminous lens area (sq mm)			Multipurpose passenger vehicles, trucks, trailers, and buses 2032 MM or more in overall width—Minimum effective projected luminous lens area each lamp (sq mm)	Motorcycles—Minimum effective projected luminous lens area (sq mm)
	Single compartment lamp	Multiple compartment lamp or multiple lamps			
		Each compartment or lamp	Combined compartments or lamps		
Front turn signal lamp	2200	—	2200	7500	2258
Rear turn signal lamp	5000	2200	5000	7500	2258
Stop lamp	5000	2200	5000	7500	(1)5000

(1) A motor driven cycle whose speed attainable in 1 mile is 30 mph or less may be equipped with a stop lamp whose minimum effective projected luminous lens area is not less than 2258 sq mm.

TABLE IV–b.—EFFECTIVE PROJECTED LUMINOUS LENS AREA REQUIREMENTS

Lighting device	Passenger cars, multipurpose passenger vehicles, trucks, and buses of less than 2032 MM in overall width and with a GVWR of 10,000 lbs or less using a single lamp—Minimum effective projected luminous lens area (sq mm)	Multipurpose passenger vehicles, trucks, and buses of less than 2032 MM in overall width and with a GVWR of 10,000 lbs or less using dual lamps of identical size and shape—Minimum effective projected luminous lens area each lamp (sq mm)
High-mounted stop lamp	2903	1452

TABLE IV–c.—EFFECTIVE PROJECTED LUMINOUS LENS AREA REQUIREMENTS

Lighting device	School bus—Minimum effective projected luminous lens area each lamp (sq mm)
School bus signal lamp	12,258

TABLE V–a.—VISIBILITY REQUIREMENTS OF INSTALLED LIGHTING DEVICES

Lighting device	Required visibility
Backup lamp	Lamps must be mounted so that the optical center of at least one lamp is visible from any eye point elevation from at least 1828 mm to 610 mm above the horizontal plane on which the vehicle is standing; and from any position in the area, rearward of a vertical plane perpendicular to the longitudinal axis of the vehicle, 914 mm to the rear of the vehicle and extending 914 mm beyond each side of the vehicle.
High-mounted stop lamp	Signal must be visible to the rear through a horizontal angle from 45° to the left to 45° to the right of the longitudinal axis of the vehicle. (Single lamp or two lamps together where required by S6.1.1.2 of this standard)
School bus signal lamp	Signal of front lamps to the front and rear lamps to the rear must be unobstructed within area bounded by 5° up to 10° down and 30° left to 30° right.

TABLE V–b.—VISIBILITY REQUIREMENTS OF INSTALLED LIGHTING DEVICES—LENS AREA VISIBILITY OPTION

Lighting device	Corner points [1] [2]		Required visibility
Turn signal lamp [3]	15°UP–45° IB	15 UP–45° OB	Unobstructed minimum effective projected luminous lens area of 1250 sq mm in any direction throughout the pattern defined by the specified corner points.
Stop lamp	15° DOWN–45° IB	15° DOWN—45° OB	
Taillamp	15° UP–45° IB	15° UP–45° OB	
Parking lamp	15° DOWN–45° IB	15° DOWN–45° OB ...	
	15° UP–45° IB	15° UP–45° OB	
	15° DOWN–45° IB	15° DOWN–45° OB ...	
	15° UP–45° IB	15° UP–45° OB	
	15° DOWN–45° IB	15° DOWN–45° OB ...	

[1] IB indicates an inboard direction (toward the vehicle's longitudinal centerline) and OB indicates an outboard direction.
[2] Where a lamp is mounted with its axis of reference less than 750 mm above the road surface, the vertical test point angles located below the horizontal plane subject to visibility requirements may be reduced to 5° down.
[3] Where more than one lamp or optical area is lighted at the front on each side of a multipurpose passenger vehicle, truck, trailer, or bus, of 2032 mm or more overall width, only one such area need comply.

TABLE V–c.—VISIBILITY REQUIREMENTS OF INSTALLED LIGHTING DEVICES—LUMINOUS INTENSITY VISIBILITY OPTION

Lighting device	Corner points [1] [2]		Required visibility—Minimum luminous intensity in any direction throughout the pattern defined by the specified corner points. Candela
Turn signal lamp	15° UP–45° IB	15° UP–80° OB	0.3
	15° DOWN–45° IB	15° DOWN–80° OB.	
Stop lamp	15° UP–45° IB	15° UP–45° OB	0.3
	15° DOWN–45° IB	15° DOWN–45° OB.	
Taillamp [3]	15° UP–45° IB	15° UP–80° OB	0.05
	15° DOWN–45° IB	15° DOWN–80° OB.	
Parking lamp	15° UP–45° IB	15° UP–80° OB	0.05
	15° DOWN–45° IB	15° DOWN–80° OB.	

[1] IB indicates an inboard direction (toward the vehicle's longitudinal centerline) and OB indicates an outboard direction.
[2] Where a lamp is mounted with its axis of reference less than 750 mm above the road surface, the vertical test point angles located below the horizontal plane subject to visibility requirements may be reduced to 5° down.
[3] Inboard and outboard corner points are 80° for a single taillamp installed on a motorcycle.

TABLE V–d.—VISIBILITY REQUIREMENTS OF INSTALLED LIGHTING DEVICES (LEGACY VISIBILITY ALTERNATIVE)

Lighting device	Required visibility [1]
Turn signal lamp:	
All passenger cars, multipurpose passenger vehicles, trucks, buses, motorcycles, and trailers of less than 2032 mm overall width.	Unobstructed minimum effective projected luminous lens area of 1250 sq mm through horizontal angle of H–V to H–45° OB.
All multipurpose passenger vehicles, trucks, buses, and trailers of 2032 mm or more overall width.	Unobstructed minimum effective projected luminous lens area of 1300 sq mm through horizontal angle of H–V to H–45° OB. Where more than one lamp or optical area is lighted on each side of the vehicle, only one such area on each side need comply.
Stop lamp	Unobstructed minimum effective projected luminous lens area of 1250 sq mm through horizontal angle of H–45° IB to H–45° OB. Where more than one lamp or optical area is lighted on each side of the vehicle, only one such area on each side need comply.

TABLE V–d.—VISIBILITY REQUIREMENTS OF INSTALLED LIGHTING DEVICES (LEGACY VISIBILITY ALTERNATIVE)—Continued

Lighting device	Required visibility [1]
Taillamp	Unobstructed minimum effective projected luminous lens area of 2 sq in through horizontal angle of H–45° IB to H–45° OB. Where more than one lamp or optical area is lighted on each side of the vehicle, only one such area on each side need comply.

(1) IB indicates an inboard direction (toward the vehicle's longitudinal centerline) and OB indicates an outboard direction.

TABLE VI-a: FRONT TURN SIGNAL LAMP PHOTOMETRY REQUIREMENTS

GROUP NUMBER	TEST POINT (degrees)		MINIMUMPHOTOMETRIC INTENSITY RATIO WHERE COMBINED WITH A :		BASE REQUIREMENTS						2.5X BASE REQUIREMENTS					
					MINIMUM PHOTOMETRIC INTENSITY[1][2] (cd)			GROUP MINIMUM PHOTOMETRIC INTENSITY (cd)			MINIMUM PHOTOMETRIC INTENSITY[1][2] (cd)			GROUP MINIMUM PHOTOMETRIC INTENSITY (cd)		
			PARKING LAMP	CLEARANCE LAMP[4]	Lighted Sections			Lighted Sections			Lighted Sections			Lighted Sections		
					1	2	3	1	2	3	1	2	3	1	2	3
1	20L	5U	3	3	25	30	35	130	155	180	62.5	75	87.5	325	387.5	450
		5D	-	3	25	30	35				62.5	75	87.5			
	5L	10U	3	3	40	48	55				100	120	137.5			
		10D[3]	-	3	40	48	55				100	120	137.5			
2	10L	5U	3	3	75	88	100	250	295	340	187.5	220	250	625	737.5	850
		H	3	3	100	120	140				250	300	350			
		5D	-	3	75	88	100				187.5	220	250			
3	V	5U	5	5	175	205	235	950	1130	1295	437.5	512.5	587.5	2375	2825	3237.5
	5L	H	5	5	200	240	275				500	600	687.5			
	V		5	5	200	240	275				500	600	687.5			
	5R		5	5	200	240	275				500	600	687.5			
	V	5D	-	3	175	205	235				437.5	512.5	587.5			
4	10R	5U	3	3	75	88	100	250	295	340	187.5	220	250	625	737.5	850
		H	3	3	100	120	140				250	300	350			
		5D	-	3	75	88	100				187.5	220	250			
5	5R	10U	3	3	40	48	55	130	155	180	100	120	137.5	325	387.5	450
		10D[3]	-	3	40	48	55				100	120	137.5			
	20R	5U	3	3	25	30	35				62.5	75	87.5			
		5D	-	3	25	30	35				62.5	75	87.5			

(1) The measured values at each test point must not be less than 60% of the minimum value.

(2) The photometric intensity values between test points must not be less than the lower specified minimum value of the two closest adjacent test points on a horizontal or vertical line.

(3) Where turn signal lamps are mounted with their axis of reference less than 750 mm above the road surface, photometry requirements below 5° down may be met at 5° down rather than at the specified required downward angle.

(4) When a clearance lamp on a vehicle 2032 mm or more in overall width is combined with a front turn signal lamp and the maximum luminous intensity of the clearance lamp is located below horizontal and within a 1.0° radius around the test point, the ratio for the test point may be computed by using the lowest value of the clearance lamp luminous intensity within the generated area.

TABLE VI-b: FRONT TURN SIGNAL LAMP PHOTOMETRY REQUIREMENTS

GROUP NUMBER	TEST POINT (degrees)		MINIMUM PHOTOMETRIC INTENSITY RATIO WHERE COMBINED WITH A :		2 X BASE REQUIREMENTS						1.5X BASE REQUIREMENTS					
					MINIMUM PHOTOMETRIC INTENSITY[1][2] (cd)			GROUP MINIMUM PHOTOMETRIC INTENSITY (cd)			MINIMUM PHOTOMETRIC INTENSITY[1][2] (cd)			GROUP MINIMUM PHOTOMETRIC INTENSITY (cd)		
			PARKING LAMP	CLEARANCE LAMP[4]	Lighted Sections			Lighted Sections			Lighted Sections			Lighted Sections		
					1	2	3	1	2	3	1	2	3	1	2	3
1	20L	5U	3	3	50	60	70	260	310	360	37.5	45	52.5	195	232.5	270
		5D	-	3	50	60	70				37.5	45	52.5			
	5L	10U	3	3	80	96	110				60	72	82.5			
		10D[3]	-	3	80	96	110				60	72	82.5			
2	10L	5U	3	3	150	176	200	500	590	680	112.5	132	150	375	442.5	510
		H	3	3	200	240	280				150	180	210			
		5D	-	3	150	176	200				112.5	132	150			
3	V	5U	5	5	350	410	470	1900	2260	2590	262.5	307.5	352.5	1425	1695	1942.5
	5L	H	5	5	400	480	550				300	360	412.5			
	V		5	5	400	480	550				300	360	412.5			
	5R		5	5	400	480	550				300	360	412.5			
	V	5D	-	3	350	410	470				262.5	307.5	352.5			
4	10R	5U	3	3	150	176	200	500	590	680	112.5	132	150	375	442.5	510
		H	3	3	200	240	280				150	180	210			
		5D	-	3	150	176	200				112.5	132	150			
5	5R	10U	3	3	80	96	110	260	310	360	60	72	82.5	195	232.5	270
		10D[3]	-	3	80	96	110				60	72	82.5			
	20R	5U	3	3	50	60	70				37.5	45	52.5			
		5D	-	3	50	60	70				37.5	45	52.5			

[1] The measured values at each test point must not be less than 60% of the minimum value.

[2] The photometric intensity values between test points must not be less than the lower specified minimum value of the two closest adjacent test points on a horizontal or vertical line.

[3] Where turn signal lamps are mounted with their axis of reference less than 750 mm above the road surface, photometry requirements below 5° down may be met at 5° down rather than at the specified required downward angle.

[4] When a clearance lamp on a vehicle 2032 mm or more in overall width is combined with a front turn signal lamp and the maximum luminous intensity of the clearance lamp is located below horizontal and within a 1.0° radius around the test point, the ratio for the test point may be computed by using the lowest value of the clearance lamp luminous intensity within the generated area.

TABLE VII: REAR TURN SIGNAL LAMP PHOTOMETRY REQUIREMENTS

GROUP NUMBER	TEST POINT (degrees)		TEST POINTS APPLICABLE TO DOUBLE FACED LAMPS[6]		MINIMUM PHOTOMETRIC INTENSITY RATIO WHERE COMBINED WITH A TAIL LAMP OR CLEARANCE LAMP[7][8]	MINIMUM PHOTOMETRIC INTENSITY[1][2] (cd) RED LAMPS			GROUP MINIMUM PHOTOMETRIC INTENSITY (cd) RED LAMPS			MINIMUM PHOTOMETRIC INTENSITY[1][2] (cd) AMBER LAMPS			GROUP MINIMUM PHOTOMETRIC INTENSITY (cd) AMBER LAMPS		
			LEFT SIDE LAMP	RIGHT SIDE LAMP		Lighted Sections			Lighted Sections			Lighted Sections			Lighted Sections		
						1	2	3	1	2	3	1[5]	2	3	1[5]	2	3
1	20L	5U	NO	YES	3	10	12	15	50	60	70	15	20	25	80/84	100	120
		5D	NO	YES	3	10	12	15				15	20	25			
	5L	10U	NO	YES	3	16	19	22				26/27	30	35			
		10D[3]	NO	YES	3	16	19	22				26/27	30	35			
2	10L	5U	NO	YES	3	30	35	40	100	115	135	50	55	65	165	185	220
		H	NO	YES	3	40	47	55				65	75	90			
		5D	NO	YES	3	30	35	40				50	55	65			
3	V	5U	YES	YES	5	70	82	95	380	445	520	110	130	150	610/590	710	825
	5L	H	NO	YES	5	80	95	110				130/120	150	175			
	V		YES	YES	5	80	95	110				130	150	175			
	5R		YES	NO	5	80	95	110				130/120	150	175			
	V	5D	YES	YES	3	70	82	95				110	130	150			
4	10R	5U	YES	NO	3	30	35	40	100	115	135	50	55	65	165	185	220
		H	YES	NO	3	40	47	55				65	75	90			
		5D	YES	NO	3	30	35	40				50	55	65			
5	5R	10U	YES	NO	3	16	19	22	50	60	70	26/27	30	35	80/84	100	120
		10D[3]	YES	NO	3	16	19	22				26/27	30	35			
	20R	5U	YES	NO	3	10	12	15				15	20	25			
		5D	YES	NO	3	10	12	15				15	20	25			
MAXIMUM PHOTOMETRIC INTENSITY[4]						300	360	420				750	900	900			

(1) The measured values at each test point must not be less than 60% of the minimum value.

(2) The photometric intensity values between test points must not be less than the lower specified minimum value of the two closest adjacent test points on a horizontal or vertical line.

(3) Where turn signal lamps are mounted with their axis of reference less than 750 mm above the road surface, photometry requirements below 5° down may be met at 5° down rather than at the required downward angle.

(4) The maximum photometric intensity must not occur over any area larger than that generated by a 0.5° radius within a solid angle defined by the test point range

(5) Values preceded by a slash (/) apply only to multipurpose passenger vehicles, trucks, trailers, and buses of 2032 mm or more in overall width.

(6) A double faced turn signal lamp installed as described in S6.1.1.3 on a truck tractor need only meet the photometric requirements for a left side lamp where the lamp is mounted on the left side of the vehicle, and for a right side lamp where the lamp is mounted on the right side of the vehicle.

(7) Required only when combined turn signal lamp and clearance lamp is installed on a vehicle 2032 mm or more in overall width.

(8) When a taillamp (or clearance lamp on a vehicle 2032 mm or more in overall width) is combined with a rear turn signal lamp and the maximum luminous intensity of the taillamp (or clearance lamp) is located below horizontal and within an area generated by a 0.5° radius around a test point (1.0° radius on lamps installed on a vehicle 2032 mm or more in overall width), the ratio for the test point may be computed by using the lowest value of the taillamp (or clearance lamp) luminous intensity within the generated area.

TABLE VIII: TAILLAMP PHOTOMETRY REQUIREMENTS

GROUP NUMBER	TEST POINT (degrees)		PHOTOMETRIC INTENSITY[1][2][4] (cd)						GROUP MINIMUM PHOTOMETRIC INTENSITY[1][2] (cd)		
			Lighted Sections						Lighted Sections		
			1		2		3		1	2	3
			MINIMUM	MAXIMUM	MINIMUM	MAXIMUM	MINIMUM	MAXIMUM			
1	20L	5U	0.3	18	0.5	20	0.7	25	1.4	2.4	3.5
		5D	0.3	-	0.5	-	0.7	-			
	5L	10U	0.4	18	0.7	20	1.0	25			
		10D[3]	0.4	-	0.7	-	1.0	-			
2	10L	5U	0.8	18	1.4	20	2.0	25	2.4	4.2	6.0
		H	0.8	18	1.4	20	2.0	25			
		5D	0.8	-	1.4	-	2.0	-			
3	V	5U	1.8	18	3.1	20	4.5	25	9.6	16.8	24.0
	5L	H	2.0	18	3.5	20	5.0	25			
	V		2.0	18	3.5	20	5.0	25			
	5R		2.0	18	3.5	20	5.0	25			
	V	5D	1.8	-	3.1	-	4.5	-			
4	10R	5U	0.8	18	1.4	20	2.0	25	2.4	4.2	6.0
		H	0.8	18	1.4	20	2.0	25			
		5D	0.8	-	1.4	-	2.0	-			
5	5R	10U	0.4	18	0.7	20	1.0	25	1.4	2.4	3.5
		10D[3]	0.4	-	0.7	-	1.0	-			
	20R	5U	0.3	18	0.5	20	0.7	25			
		5D	0.3	-	0.5	-	0.7	-			

(1) The photometric intensity values between test points must not be less than the lower specified minimum value of the two closest adjacent test points on a horizontal or vertical line.

(2) If the sum of intensity values for all points in the zone is not less than the specified total value for the zone, the measured intensity value for each individual test point is not required to meet the minimum value.

(3) Where taillamps are mounted with their axis of reference less than 750 mm above the road surface, photometry requirements below 5° down may be met at 5° down rather than at the specified required downward angle.

(4) A taillamp shall not exceed the maximum intensity over any area larger than that generated by a 0.25° radius, within a solid cone angle from 20°L to 20°R and from H to 10°U.

TABLE IX: STOP LAMP PHOTOMETRY REQUIREMENTS

GROUP NUMBER	TEST POINT (degrees)		MINIMUM PHOTOMETRIC INTENSITY RATIO WHERE COMBINED WITH A TAIL LAMP[5]	MINIMUM PHOTOMETRIC INTENSITY[1,2] (cd) Lighted Sections 1	2	3	GROUP MINIMUM PHOTOMETRIC INTENSITY (cd) Lighted Sections 1	2	3
1	20L	5U	3	10	12	15	50	60	70
		5D	3	10	12	15			
	5L	10U	3	16	19	22			
		10D[4]	3	16	19	22			
2	10L	5U	3	30	35	40	100	115	135
		H	3	40	47	55			
		5D	3	30	35	40			
3	V	5U	5	70	82	95	380	445	520
	5L	H	3/5[6]	80	95	110			
	V		5	80	95	110			
	5R		5	80	95	110			
	V	5D	3	70	82	95			
4	10R	5U	3	30	35	40	100	115	135
		H	3	40	47	55			
		5D	3	30	35	40			
5	5R	10U	3	16	19	22	50	60	70
		10D[4]	3	16	19	22			
	20R	5U	3	10	12	15			
		5D	3	10	12	15			
MAXIMUM PHOTOMETRIC INTENSITY[3]				300	360	420			

(1) The measured values at each test point must not be less than 60% of the minimum value.
(2) The photometric intensity values between test points must not be less than the lower specified minimum value of the two closest adjacent test points on a horizontal or vertical line.
(3) The maximum photometric intensity must not occur over any area larger than that generated by a 0.5° radius within a solid angle defined by the test point range
(4) Where stop lamps are mounted with their axis of reference less than 750 mm above the road surface, photometry requirements below 5° down may be met at 5° down rather than at the specified required downward angle.
(5) When a taillamp is combined with a stop lamp and the maximum luminous intensity of the taillamp is located below horizontal and within an area generated by a 0.5° radius around a test point (1.0° radius on lamps installed on a vehicle 2032 mm or more in overall width), the ratio for the test point may be computed by using the lowest value of the taillamp luminous intensity within the generated area.
(6) Values preceded by a slash (/) apply only to lamps installed on multipurpose passenger vehicles, trucks, trailers, and buses of 2032 mm or more in overall width.

TABLE X—SIDE MARKER LAMP PHOTOMETRY REQUIREMENTS

Test point (degrees)	Minimum photometric intensity (cd) (2) red lamps	Minimum photometric intensity (cd) (2) amber lamps
10U:		
45L (1)	0.25	0.62
V	0.25	0.62
45R (1)	0.25	0.62
H:		
45L (1)	0.25	0.62
V	0.25	0.62
45R (1)	0.25	0.62
10D: (3)		
45L (1)	0.25	0.62
V	0.25	0.62

TABLE X—SIDE MARKER LAMP PHOTOMETRY REQUIREMENTS—Continued

Test point (degrees)	Minimum photometric intensity (cd) [2] red lamps	Minimum photometric intensity (cd) [2] amber lamps
45R [1]	0.25	0.62

[1] Where a side marker lamp installed on a motor vehicle less than 30 feet in overall length and less than 80 inches (2 m) in overall width has the lateral angle nearest the other required side marker lamp on the same side of the vehicle reduced from 45° by design as specified by S7.4.13.2, the photometric intensity measurement may be met at the lesser angle.

[2] The photometric intensity values between test points must not be less than the lower specified minimum value of the two closest adjacent test points on a horizontal or vertical line.

[3] Where side marker lamps are mounted with their axis of reference less than 750 mm above the road surface, photometry requirements below 5° down may be met at 5° down rather than at the specified required downward angle.

TABLE XI—CLEARANCE AND IDENTIFICATION LAMPS PHOTOMETRY REQUIREMENTS

Test point (degrees)	Minimum photometric intensity (cd) [2] red lamps	Minimum photometric intensity (cd) [2] amber lamps
10U:		
45L [4]	0.25	0.62
V	0.25	0.62
45R [4]	0.25	0.62
H:		
45L [4]	0.25	0.62
V	0.25	0.62
45R [4]	0.25	0.62
10D: [1]		
45L [4]	0.25	0.62
V	0.25	0.62
45R [4]	0.25	0.62
Maximum photometric intensity [3] (cd) red lamps	15	

[1] Where clearance lamps or identification lamps are mounted with their axis of reference less than 750mm above the road surface, photometry requirements below 5° down may be met at 5° down rather than at the specified required downward angle.

[2] The photometric intensity values between test points must not be less than the lower specified minimum value of the two closest adjacent test points on a horizontal or vertical line.

[3] When optically combined with a stop lamp or turn signal lamp, this maximum applies on or above the horizontal.

[4] Where clearance lamps are installed at locations other than on the front and rear due to the necessity to indicate the overall width of the vehicle, or for protection from damage during normal operation of the vehicle, they need not meet the photometric intensity requirement at any test point that is 45° inboard.

TABLE XII: BACKUP LAMP PHOTOMETRY REQUIREMENTS

GROUP NUMBER	TEST POINT (degrees)		MAXIMUM PHOTOMETRIC INTENSITY (cd) ANY SINGLE LAMP	TWO LAMP SYSTEMS – EACH LAMP		SINGLE LAMP SYSTEM	
				MINIMUM PHOTOMETRIC INTENSITY (cd)[1][4]	GROUP MINIMUM PHOTOMETRIC INTENSITY (cd)	MINIMUM PHOTOMETRIC INTENSITY (cd)[1][4]	GROUP MINIMUM PHOTOMETRIC INTENSITY (cd)
1[2][3]	45L	5U	300	15	45	30	90
		H	300	15		30	
		5D	-	15		30	
2[2][3]	30L	H	300	25	50	50	100
		5D	-	25		50	
3	10L	10U	300	10	100	20	200
		5U	300	20		40	
	V	10U	300	15		30	
		5U	300	25		50	
	10R	10U	300	10		20	
		5U	300	20		40	
4	10L	H	300	50	360	100	720
		5D	-	50		100	
	V	H	300	80		160	
		5D	-	80		160	
	10R	H	300	50		100	
		5D	-	50		100	
5[2][3]	30R	H	300	25	50	50	100
		5D	-	25		50	
6[2][3]	45R	5U	300	15	45	30	90
		H	300	15		30	
		5D	-	15		30	

(1) The photometric intensity values between test points must not be less than the lower specified minimum value of the two closest adjacent test points on a horizontal or vertical line.

(2) When two lamps of the same or symmetrically opposite design are used, the tested photometric values along the vertical axis and the averages of the tested photometric values for the same horizontal test point left and right of vertical for one lamp must be used to determine compliance with the requirements.

(3) When two lamps of differing designs are used, they must be tested individually and the tested photometric values added to determine the combined units compliance with twice the stated requirements.

(4) If the sum of intensity values for all points in the zone is not less than the specified total value for the zone, the measured intensity value for each individual test point is not required to meet the minimum value.

TABLE XIII-a: MOTORCYCLE TURN SIGNAL LAMP ALTERNATIVE PHOTOMETRY REQUIREMENTS

GROUP NUMBER	TEST POINT (degrees)		MINIMUM PHOTOMETRIC INTENSITY RATIO WHERE COMBINED WITH A:		MINIMUM PHOTOMETRIC INTENSITY[1,2] (cd) FRONT TURN SIGNAL LAMP			GROUP MINIMUM PHOTOMETRIC INTENSITY (cd) FRONT TURN SIGNAL LAMP			MINIMUM PHOTOMETRIC INTENSITY[1,2] (cd) RED REAR TURN SIGNAL LAMP			GROUP MINIMUM PHOTOMETRIC INTENSITY[1,2] (cd) RED REAR TURN SIGNAL LAMP			MINIMUM PHOTOMETRIC INTENSITY[1,2] (cd) AMBER REAR TURN SIGNAL LAMP			GROUP MINIMUM PHOTOMETRIC INTENSITY (cd) AMBER REAR TURN SIGNAL LAMP		
			PARKING LAMP	TAIL LAMP[5]	Lighted Sections			Lighted Sections			Lighted Sections			Lighted Sections			Lighted Sections			Lighted Sections		
					1	2	3	1	2	3	1	2	3	1	2	3	1	2	3	1	2	3
1	20L	5U	3	3	12.5	15	17.5	65	77.5	90	5	6	7.5	25	30	35	7.5	10	12.5	40	50	60
		5D	-	3	12.5	15	17.5				5	6	7.5				7.5	10	12.5			
	5L	10U	3	3	20	24	27.5				8	9.5	11				13	15	17.5			
		10D[4]	-	3	20	24	27.5				8	9.5	11				13	15	17.5			
2	10L	5U	3	3	37.5	44	50	125	147.5	170	15	17.5	20	50	57.5	67.5	25	27.5	32.5	82.5	92.5	110
		H	3	3	50	60	70				20	23.5	27.5				32.5	37.5	45			
		5D	-	3	37.5	44	50				15	17.5	20				25	27.5	32.5			
3	V	5U	5	5	87.5	102.5	117.5	475	565	647.5	35	41	47.5	190	222.5	260	55	65	75	305	355	412.5
	5L	H	5	5	100	120	137.5				40	47.5	55				65	75	87.5			
	V		5	5	100	120	137.5				40	47.5	55				65	75	87.5			
	5R		5	5	100	120	137.5				40	47.5	55				65	75	87.5			
	V	5D	-	3	87.5	102.5	117.5				35	41	47.5				55	65	75			
4	10R	5U	3	3	37.5	44	50	125	147.5	170	15	17.5	20	50	57.5	67.5	25	27.5	32.5	82.5	92.5	110
		H	3	3	50	60	70				20	23.5	27.5				32.5	37.5	45			
		5D	-	3	37.5	44	50				15	17.5	20				25	27.5	32.5			
5	5R	10U	3	3	20	24	27.5	65	77.5	90	8	9.5	11	25	30	35	13	15	17.5	40	50	60
		10D[4]	-	3	20	24	27.5				8	9.5	11				13	15	17.5			
	20R	5U	3	3	12.5	15	17.5				5	6	7.5				7.5	10	12.5			
		5D	-	3	12.5	15	17.5				5	6	7.5				7.5	10	12.5			
MAXIMUM PHOTOMETRIC INTENSITY[3]											300	360	420				750	900	900			

(1) The measured values at each test point must not be less than 60% of the minimum value.

(2) The photometric intensity values between test points must not be less than the lower specified minimum value of the two closest adjacent test points on a horizontal or vertical line.

(3) The maximum photometric intensity must not occur over any area larger than that generated by a 0.5° radius within a solid angle defined by the test point range.

(4) Where turn signal lamps are mounted with their axis of reference less than 750 mm above the road surface, photometry requirements below 5° down may be met at 5° down rather than at the specified required downward angle.

(5) When a taillamp is combined with a rear turn signal lamp and the maximum luminous intensity of the taillamp is located below horizontal and within an area generated by a 0.5° radius around a test point the ratio for the test point may be computed by using the lowest value of the taillamp luminous intensity within the generated area.

TABLE XIII-b: MOTOR DRIVEN CYCLE STOP LAMP[3] ALTERNATIVE PHOTOMETRY REQUIREMENTS

GROUP NUMBER	TEST POINT (degrees)		MINIMUM PHOTOMETRIC INTENSITY RATIO WHERE A MOTOR DRIVEN CYCLE STOP LAMP IS COMBINED WITH A TAIL LAMP[4]	GROUP MINIMUM PHOTOMETRIC INTENSITY (cd) MOTOR DRIVEN CYCLE STOP LAMP		
				Lighted Sections		
				1	2	3
1	20L	5U	3	26	31	36
		5D	3			
	5L	10U	3			
		10D[2]	3			
2	10L	5U	3	50	59	69
		H	3			
		5D	3			
3	V	5U	5	190	226	261
	5L	H	5			
	V		5			
	5R		5			
	V	5D	3			
4	10R	5U	3	50	59	69
		H	3			
		5D	3			
5	5R	10U	3	26	31	36
		10D[2]	3			
	20R	5U	3			
		5D	3			
MAXIMUM PHOTOMETRIC INTENSITY[1]				300	360	420

(1) The maximum photometric intensity must not occur over any area larger than that generated by a 0.5° radius within a solid angle defined by the test point range.

(2) Where stop lamps are mounted with their axis of reference less than 750 mm above the road surface, photometry requirements below 5° down may be met at 5° down rather than at the specified required downward angle.

(3) Requirements for a motor-driven cycle whose speed attainable in 1 mile is 30 mph or less.

(4) When a taillamp is combined with a stop lamp and the maximum luminous intensity of the taillamp is located below horizontal and within an area generated by a 0.5° radius around a test point the ratio for the test point may be computed by using the lowest value of the taillamp luminous intensity within the generated area

TABLE XIV: PARKING LAMP PHOTOMETRY REQUIREMENTS

GROUP NUMBER	TEST POINT (degrees)		MINIMUM PHOTOMETRIC INTENSITY[1][2] (cd)	MAXIMUM PHOTOMETRIC INTENSITY (cd)	GROUP MINIMUM PHOTOMETRIC INTENSITY (cd)
1	20L	5U	0.4	125	2.4
		5D	0.4	250	
	5L	10U	0.8	125	
		10D[3]	0.8	250	
2	10L	5U	0.8	125	3.0
		H	1.4	125	
		5D	0.8	250	
3	V	5U	2.8	125	16.8
	5L	H	3.6	125	
	V		4.0	125	
	5R		3.6	125	
	V	5D	2.8	250	
4	10R	5U	0.8	125	3.0
		H	1.4	125	
		5D	0.8	250	
5	5R	10U	0.8	125	2.4
		10D[3]	0.8	250	
	20R	5U	0.4	125	
		5D	0.4	250	

[1] The photometric intensity values between test points must not be less than the lower specified minimum value of the two closest adjacent test points on a horizontal or vertical line.

[2] If the sum of intensity values for all points in the zone is not less than the specified total value for the zone, the measured intensity value for each individual test point is not required to meet the minimum value.

[3] Where parking lamps are mounted with their axis of reference less than 750 mm above the road surface, photometry requirements below 5° down may be met at 5° down rather than at the specified required downward angle.

TABLE XV: HIGH-MOUNTED STOP LAMP PHOTOMETRY REQUIREMENTS

GROUP NUMBER	TEST POINT (degrees)		MINIMUM PHOTOMETRIC INTENSITY[1][2][3] (cd)	GROUP MINIMUM PHOTOMETRIC INTENSITY[3] (cd)
1	5U	V	25	125
	H	5L	25	
	H	V	25	
	H	5R	25	
	5D	V	25	
2	5U	5R	25	98
	5U	10R	16	
	H	10R	16	
	5D	10R	16	
	5D	5R	25	
3	5U	5L	25	98
	5U	10L	16	
	H	10L	16	
	5D	10L	16	
	5D	5L	25	
4	10U	10L	8	32
	10U	V	16	
	10U	10R	8	
MAXIMUM PHOTOMETRIC INTENSITY[4]			160	

(1) The photometric intensity values between test points must not be less than the lower specified minimum value of the two closest adjacent test points on a horizontal or vertical line.

(2) The photometric intensity at each test point must not be less than 60%of the specified minimum value when considering overall group or zone photometry tables.

(3) Where a pair of lamps identical in size and shape are used due to vehicle construction, they together must meet photometric requirements.

(4) The maximum photometric intensity must not occur over any area larger than that generated by a 0.25° radius within a solid cone angle within the rectangle bounded by test points 10U-10L, 10U-10R, 5D-10L, and 5D-10R.

TABLE XVI–a.—REFLEX REFLECTOR PHOTOMETRY REQUIREMENTS

Observation angle (degrees)	Entrance angle (degrees)	Minimum performance					
		Red reflectors		Amber reflectors		White reflectors	
		(cd/incident ft-c)	(mcd/lux)	(cd/incident ft-c)	(mcd/lux)	(cd/incident ft-c)	(mcd/lux)
0.2	0	4.5	420	11.25	1050	18	1680
	10U	3.0	280	7.5	700	12	1120
	10D [1]	3.0	280	7.5	700	12	1120
	20L	1.5	140	3.75	350	6	560
	20R	1.5	140	3.75	350	6	560
1.5	0	0.07	6	0.175	15	0.28	24
	10U	0.05	5	0.125	12.5	0.2	20
	10D [1]	0.05	5	0.125	12.5	0.2	20
	20L	0.03	3	0.075	7.5	0.12	12
	20R	0.03	3	0.075	7.5	0.12	12

[1] Where reflex reflectors are mounted with their axis of reference less than 750 mm above the road surface, photometry requirements below 5° down may be met at 5° down rather than at the required specified downward angle.

TABLE XVI–b.—ADDITIONAL PHOTOMETRY REQUIREMENTS FOR CONSPICUITY REFLEX REFLECTORS

Observation angle (degrees)	Entrance angle (degrees)	Minimum performance		
		Red (mcd/lux)	White horizontal orientation (mcd/lux)	White vertical orientation (mcd/lux)
0.2	0	300	1250	1680
	20L TO 20R			560
	30L TO 30R	300	1250	
	45L TO 45R	75	300	
	10U TO 10D	1120		

TABLE XVI–c.—RETROREFLECTIVE SHEETING PHOTOMETRY REQUIREMENTS

Observation angle (degrees)	Entrance angle (degrees)	Minimum performance					
		Grade dot-C2		Grade dot-C3		Grade dot-C4	
		White	Red	White	Red	White	Red
		(cd/lux/sq m)	(cd/lux/sq m)	(cd/lux/sq m)	(cd/lux/sq m)	(cd/lux/sq m)	(cd/lux/sq m)
0.2	−4	250	60	165	40	125	30
	30	250	60	165	40	125	30
	45	60	15	40	10	30	8
0.5	−4	65	15	43	10	33	8
	30	65	15	43	10	33	8
	45	15	4	10	3	8	2

TABLE XVII—SCHOOL BUS SIGNAL LAMP PHOTOMETRY REQUIREMENTS

Test point (degrees)	Minimum photometric intensity (cd) [2] red lamps	Minimum photometric intensity (cd) amber lamps
5U:		
20L	150	375
10L	300	750
5L	300	750
V	300	750
5R	300	750
10R	300	750
20R	150	375
H:		
30L	30	75
20L	180	450
10L	400	1000
5L	500	1250

TABLE XVII—SCHOOL BUS SIGNAL LAMP PHOTOMETRY REQUIREMENTS—Continued

Test point (degrees)	Minimum photometric intensity (cd) [2] red lamps	Minimum photometric intensity (cd) amber lamps
V	600	1500
5R	500	1250
10R	400	1000
20R	180	450
30R	30	75
5D:		
30L	30	75
20L	200	500
10L	300	750
5L	450	1125
V	450	1125
5R	450	1125
10R	300	750

TABLE XVII—SCHOOL BUS SIGNAL LAMP PHOTOMETRY REQUIREMENTS—Continued

Test point (degrees)	Minimum photometric intensity (cd) [2] red lamps	Minimum photometric intensity (cd) amber lamps
20R	200	500
30R	30	75
10D: [1]		
5L	40	100
V	40	100

TABLE XVII—SCHOOL BUS SIGNAL LAMP PHOTOMETRY REQUIREMENTS—Continued

Test point (degrees)	Minimum photometric intensity (cd) [2] red lamps	Minimum photometric intensity (cd) amber lamps
5R	40	100

[1] Where school bus signal lamps are mounted with their axis of reference less than 750 mm above the road surface, photometry requirements below 5° down may be met at 5° down rather than at the specified required downward angle.

[2] The photometric intensity values between test points must not be less than the lower specified minimum value of the two closest adjacent test points on a horizontal or vertical line.

TABLE XVIII: HEADLAMP UPPER BEAM PHOTOMETRY REQUIREMENTS

TEST POINT (degrees)		UPPER BEAM #1 (UB1)		UPPER BEAM #2 (UB2)		UPPER BEAM #3 (UB3)	
		MAXIMUM PHOTOMETRIC INTENSITY (cd)	MINIMUM PHOTOMETRIC INTENSITY (cd)	MAXIMUM PHOTOMETRIC INTENSITY (cd)	MINIMUM PHOTOMETRIC INTENSITY (cd)	MAXIMUM PHOTOMETRIC INTENSITY (cd)	MINIMUM PHOTOMETRIC INTENSITY (cd)
2U	V	-	1,500	-	1,500	-	1,000
1U	3L &3R	-	5,000	-	5,000	-	2,000
H	V	70,000	40,000	75,000	40,000	75,000	20,000
H	3L & 3R	-	15,000	-	15,000	-	10,000
H	6L & 6R	-	5,000	-	5,000	-	3,250
H	9L & 9R	-	3,000	-	3,000	-	1,500
H	12L & 12R	-	1,500	-	1,500	-	750
1.5D	V	-	5,000	-	5,000	-	5,000
1.5D	9L & 9R	-	2,000	-	2,000	-	1,500
2.5D	V	-	2,500	-	2,500	-	2,500
2.5D	12L & 12R	-	1,000	-	1,000	-	750
4D	V	5,000	-	12,000	-	5,000	-
		UPPER BEAM #4 (UB4)		UPPER BEAM #5 (UB5)		UPPER BEAM #6 (UB6)	
2U	V	-	750	-	750	-	1,500
1U	3L &3R	-	3,000	-	2,000	-	5,000
H	V	60,000	18,000	15,000	7,000	70,000	40,000
H	3L & 3R	-	12,000	-	3,000	-	15,000
H	6L & 6R	-	3,000	-	2,000	-	5,000
H	9L & 9R	-	2,000	-	1,000	-	3,000
H	12L & 12R	-	750	-	750	-	1,500
1.5D	V	-	3,000	-	2,000	-	5,000
1.5D	9L & 9R	-	1,250	-	750	-	1,000
2.5D	V	-	1,500	-	1,000	-	-
2.5D	12L & 12R	-	600	-	400	-	-
4D	V	5,000	-	2,500	-	5,000	-

TABLE XIX-a: HEADLAMP LOWER BEAM PHOTOMETRY REQUIREMENTS

TEST POINT (degrees)		LOWER BEAM # 1M (LB1M)		LOWER BEAM # 1V (LB1V)		LOWER BEAM # 2M (LB2M)		LOWER BEAM # 2V (LB2V)	
		MAXIMUM PHOTOMETRIC INTENSITY (cd)	MINIMUM PHOTOMETRIC INTENSITY (cd)	MAXIMUM PHOTOMETRIC INTENSITY (cd)	MINIMUM PHOTOMETRIC INTENSITY (cd)	MAXIMUM PHOTOMETRIC INTENSITY (cd)	MINIMUM PHOTOMETRIC INTENSITY (cd)	MAXIMUM PHOTOMETRIC INTENSITY (cd)	MINIMUM PHOTOMETRIC INTENSITY (cd)
(1) 10U to 90U	(1) 90L to 90R	125	-	125	-	125	-	125	
4U	8L & 8R	-	64	-	64	-	64	--	64
2U	4L	-	135	-	135	-	135	-	135
1.5U	1R to 3R	-	200	-	200	-	200	-	200
1.5U	1R to R	1,400	-	1,400	-	1,400	-	1,400	-
1U	1.5L to L	700	-	700	-	700	-	700	-
0.5U	1.5L to L	1,000	-	1,000	-	1,000	-	1,000	-
0.5U	1R to 3R	2,700	500	2,700	500	2,700	500	2,700	500
H	V	5,000	-	5,000	-	-	-	-	-
H	4L	-	135	-	135	-	135	-	135
H	8L	-	64	-	64	-	64	-	64
0.5D	1.5L to L	3,000	-	-	-	3,000	-	-	-
0.5D	1.5R	20,000	10,000	-	-	20,000	10,000	-	-
0.6D	1.3R	-	-	-	10,000	-	-	-	10,000
0.86D	V	-	-	-	4,500	-	-	-	4,500
0.86D	3.5L	-	-	12,000	1,800	-	-	12,000	1,800
1D	6L	-	1,000	-	-	-	1,000	-	-
1.5D	2R	-	15,000	-	15,000	-	15,000	-	15,000
1.5D	9L & 9R	-	1,000	-	-	-	1,000	-	-
2D	9L & 9R	-	-	-	1,250	-	-	-	1,250
2D	15L & 15R	-	850	-	1,000	-	850	-	1,000
2.5D	V	-	-	-	-	-		-	-
2.5D	12L & 12R	-	-	-	-	-	-	-	-
4D	V	7,000	-	10,000	-	-	-	-	-
4D	4R	12,500	-	12,500	-	12,500	-	12,500	-
4D	20L & 20R	-	-	-	300	-	-	-	300

(1) These test points are boundaries, all test points that fall into the area defined by these points must meet the listed photometry requirement.

TABLE XIX-b: HEADLAMP LOWER BEAM PHOTOMETRY REQUIREMENTS

TEST POINT (degrees)		LOWER BEAM #3 M (LB3M)		LOWER BEAM # 3V (LB3V)		LOWER BEAM # 4M (LB4M)		LOWER BEAM # 5M (LB5M)	
		MAXIMUM PHOTOMETRIC INTENSITY (cd)	MINIMUM PHOTOMETRIC INTENSITY (cd)	MAXIMUM PHOTOMETRIC INTENSITY (cd)	MINIMUM PHOTOMETRIC INTENSITY (cd)	MAXIMUM PHOTOMETRIC INTENSITY (cd)	MINIMUM PHOTOMETRIC INTENSITY (cd)	MAXIMUM PHOTOMETRIC INTENSITY (cd)	MINIMUM PHOTOMETRIC INTENSITY (cd)
(1) 10U to 90U	(1) 90L to 90R	125	-	125	-	125	-	125	-
4U	8L & 8R	-	64	-	64	-	64	-	64
2U	4L	-	135	-	135	-	135	-	135
1.5U	1R to 3R	-	200	-	200	-	200	-	200
1.5U	1R to R	1,400	-	1,400	-	1,400	-	1,400	--
1U	1.5L to L	700	-	700	-	700	-	700	-
0.5U	1.5L to L	1,000	-	1,000	-	1,000	-	1,000	-
0.5U	1R to 3R	2,700	500	2,700	500	2,700	500	2,700	500
H	V	-	-	-	-	-	-	5,000	-
H	4L	-	135	-	135	-	135	-	135
H	8L	-	64	-	64	-	64	-	64
0.5D	1.5L to L	2,500	-	-	-	2500	-	3,000	-
0.5D	1.5R	20,000	8,000	-	-	20,000	8,000	20,000	10,000
0.6D	1.3R	-		-	10,000	-	-	-	-
0.86D	V	-	--	-	4,500	-	-	-	-
0.86D	3.5L	-	-	12,000	1,800	-	-	-	-
1D	6L	-	750	-	-	-	750	-	1,000
1.5D	2R	-	15,000	-	15,000	-	15,000	-	15,000
1.5D	9L & 9R	-	750	-	-	-	750	-	1,000
2D	9L & 9R	-	-	-	1,250	-	-	-	-
2D	15L & 15R	-	700	-	1,000	-	700	-	850
2.5D	V	-	-	-	-	-	-	-	2,500
2.5D	12L & 12R	-	-	-	-	-	-	-	1,000
4D	V	-	-	-	-	-	-	7,000	-
4D	4R	12,500	-	12,500	-	12,500	-	12,500	-
4D	20L & 20R	-	-	-	300	-	-	-	-

(1) These test points are boundaries, all test points that fall into the area defined by these points must meet the listed photometry requirement.

TABLE XIX-c: HEADLAMP LOWER BEAM PHOTOMETRY REQUIREMENTS

TEST POINT (degrees)		LOWER BEAM # 4 V (LB4V)	
		MAXIMUM PHOTOMETRIC INTENSITY (cd)	MINIMUM PHOTOMETRIC INTENSITY (cd)
(1) 10U to 90U	(1) 90L to 90R	125	-
4U	8L & 8R	-	64
2U	4L	-	135
1.5U	1R to 3R	-	200
1.5U	1R to R	1,400	-
1U	1.5L to L	700	-
0.5U	1.5L to L	1,000	-
0.5U	1R to 3R	2,700	500
H	V	5,000	-
H	4L	-	135
H	8L	-	64
0.5D	1.5L to L	-	-
0.5D	1.5R	-	-
0.6D	1.3R	-	10,000
0.86D	V	-	4,500
0.86D	3.5L	12,000	1,800
1D	6L	-	-
1.5D	2R	-	15,000
1.5D	9L & 9R	--	-
2D	9L & 9R	-	1,250
2D	15L & 15R	-	1,000
2.5D	V	-	2,500
2.5D	12L & 12R	-	1,000
4D	V	10,000	-
4D	4R	12,500	-
4D	20L & 20R	-	300

(1) These test points are boundaries, all test points that fall into the area defined by these points must meet the listed photometry requirement.

TABLE XX: MOTORCYCLE AND MOTOR DRIVEN CYCLE HEADLAMP PHOTOMETRY REQUIREMENTS

LOWER BEAM

TEST POINT (degrees)		MOTORCYCLE		MOTOR DRIVEN CYCLE		MOTOR DRIVEN CYCLE with Single Lamp System	
		MAXIMUM PHOTOMETRIC INTENSITY (cd)	MINIMUM PHOTOMETRIC INTENSITY (cd)	MAXIMUM PHOTOMETRIC INTENSITY (cd)	MINIMUM PHOTOMETRIC INTENSITY (cd)	MAXIMUM PHOTOMETRIC INTENSITY (cd)	MINIMUM PHOTOMETRIC INTENSITY (cd)
1.5U	1R to R	1,400	-	1,400	-	-	-
1.5U	1R to 3R	-	-	-	-	1,400	-
1U	1.5L to L	700	-	700	-	700	-
0.5U	1.5L to L	1,000	-	1,000	-	1,000	-
0.5U	1R to 3R	2,700	-	2,700	-	2,700	-
1.5D	9L and 9R	-	700	-	-	-	-
2D	V	-	7,000	-	5,000	-	4,000
2D	3L and 3R	-	4,000	-	3,000	-	3,000
2D	6L and 6R	-	1,500	-	1,500	-	1,500
2D	12L and 12R	-	700	-	-	-	-
3D	6L and 6R	-	800	-	800	-	-
4D	V	-	2,000	-	2,000	-	1,000
4D	4R	12,500	-	12,500	-	12,500	-

UPPER BEAM

TEST POINT (degrees)		MOTORCYCLE		MOTOR DRIVEN CYCLE	
		MAXIMUM PHOTOMETRIC INTENSITY (cd)	MINIMUM PHOTOMETRIC INTENSITY (cd)	MAXIMUM PHOTOMETRIC INTENSITY (cd)	MINIMUM PHOTOMETRIC INTENSITY (cd)
2U	V	-	1,000	-	-
1U	3L and 3R	-	2,000	-	2,000
H	V	-	12,500	-	10,000
0.5D	V	-	20,000	-	20,000
0.5D	3L and 3R	-	10,000	-	5,000
0.5D	6L and 6R	-	3,300	-	2,000
0.5D	9L and 9R	-	1,500	-	-
0.5D	12L and 12R	-	800	-	-
1D	V	-	17,500	-	15,000
2D	V	-	5,000	-	5,000
3D	V	-	2,500	-	2,500
3D	6L and 6R	-	-	-	800
3D	9L and 9R	-	1,500	-	-
3D	12L and 12R	-	300	-	-
4D	V	-	1,500	-	-
4D	V	7,500	-	7,500	-
ANYWHERE IN BEAM		75,000	-	75,000	-

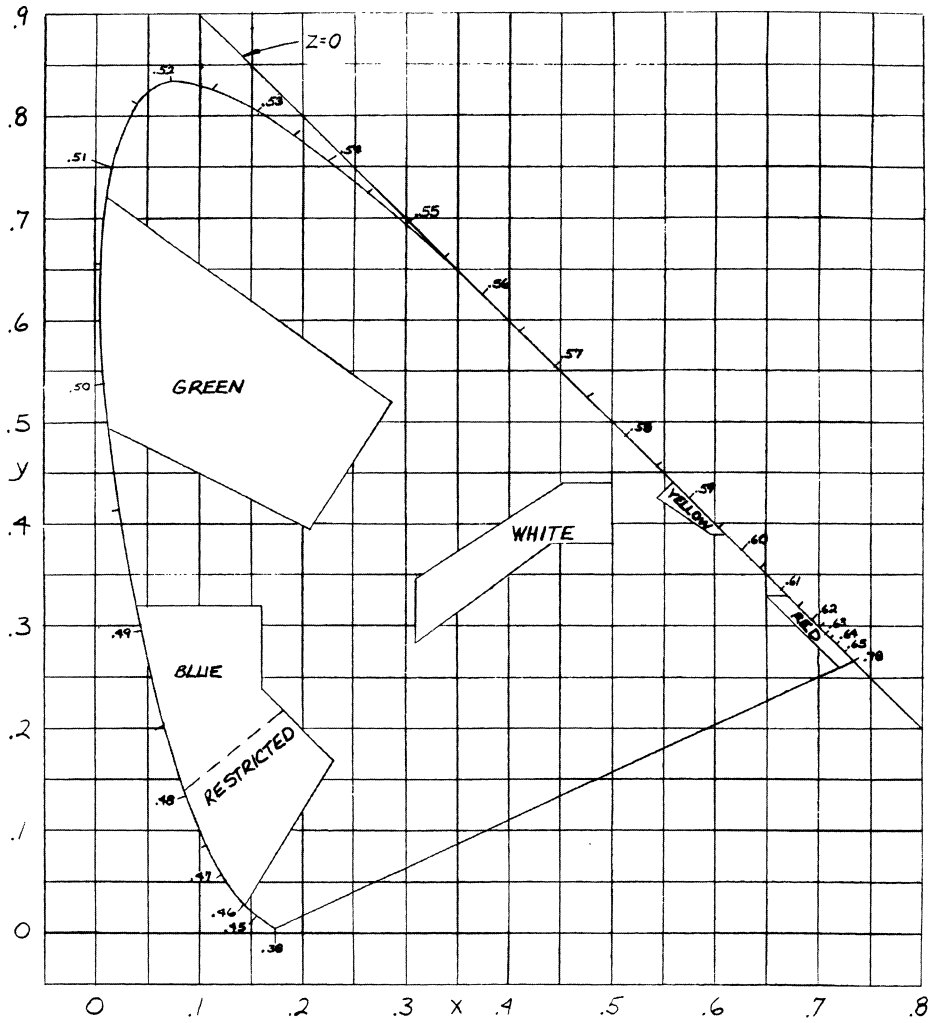

CHROMATICITY DIAGRAM

FIGURE 1

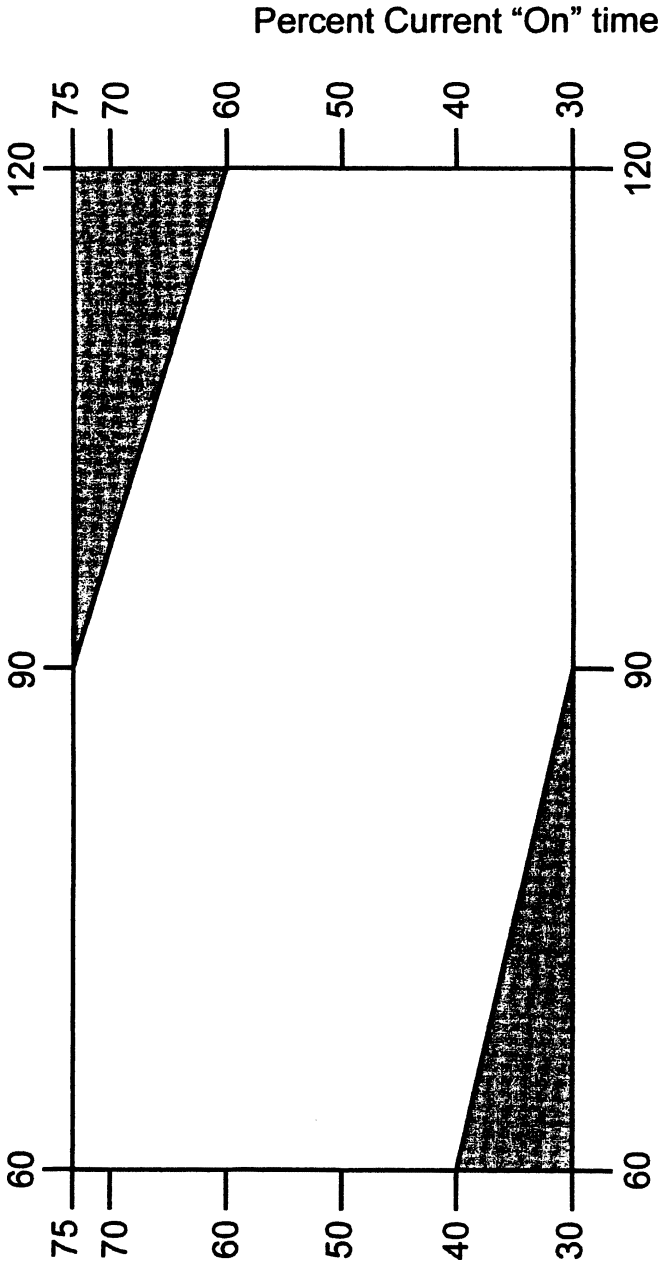

FLASHER PERFORMANCE CHART

FIGURE 2

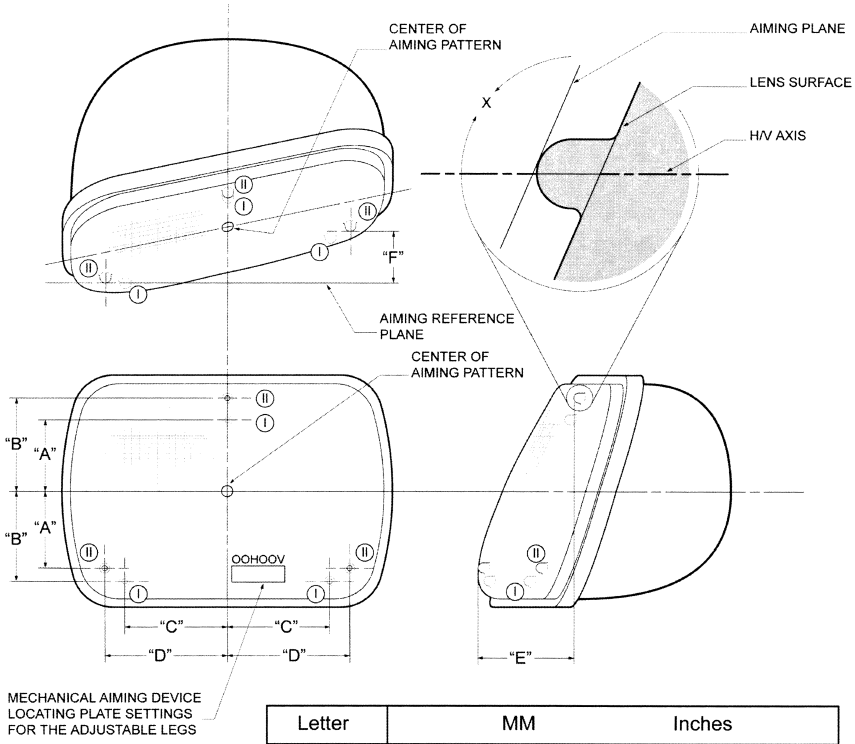

Notes:
Group I or Group II aiming pad locations may be used

Group I aiming pad location (front view) is that prescribed for 2B1 sealed beam units

Group II aiming pad location (front view) is that prescribed for 1A1/2A1 sealed beam units

Letter	MM	Inches
A	42.16 ± 0.25	1.660 ± 0.010
B	60.05 ± 1.00	2.364 ± 0.039
C	64.0 ± 1.00	2.520 ± 0.039
D	68.58 ± 0.51	2.700 ± 0.020
E	Mechanical aiming device locating plate setting for the vertical adjustable leg. (Millimeters)	
F	Mechanical aiming device locating plate setting for the horizontal adjustable leg. (Millimeters)	

REPLACEABLE BULB HEADLAMP AIM PADS

FIGURE 3

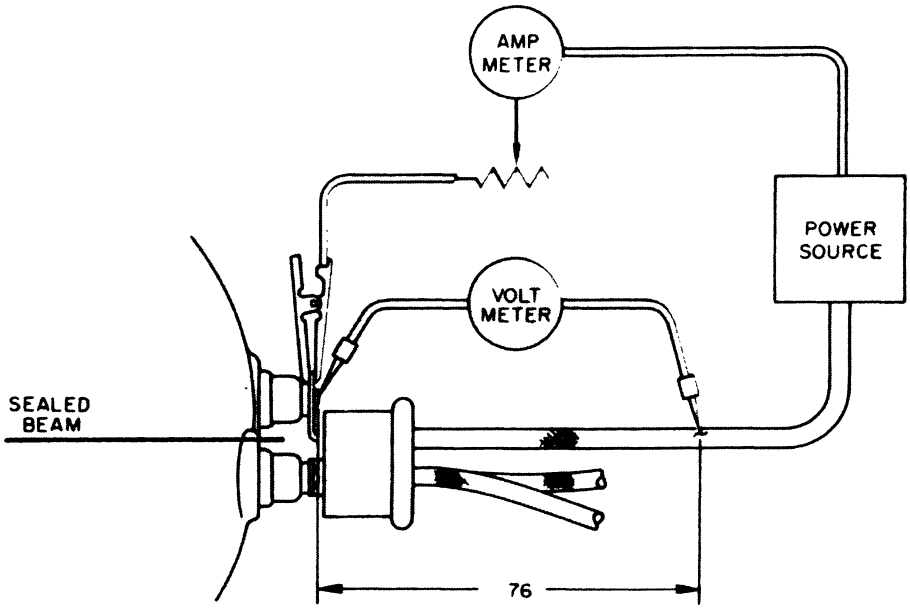

NOTE DIMENSIONS ARE mm

HEADLAMP CONNECTOR TEST SETUP

FIGURE 4

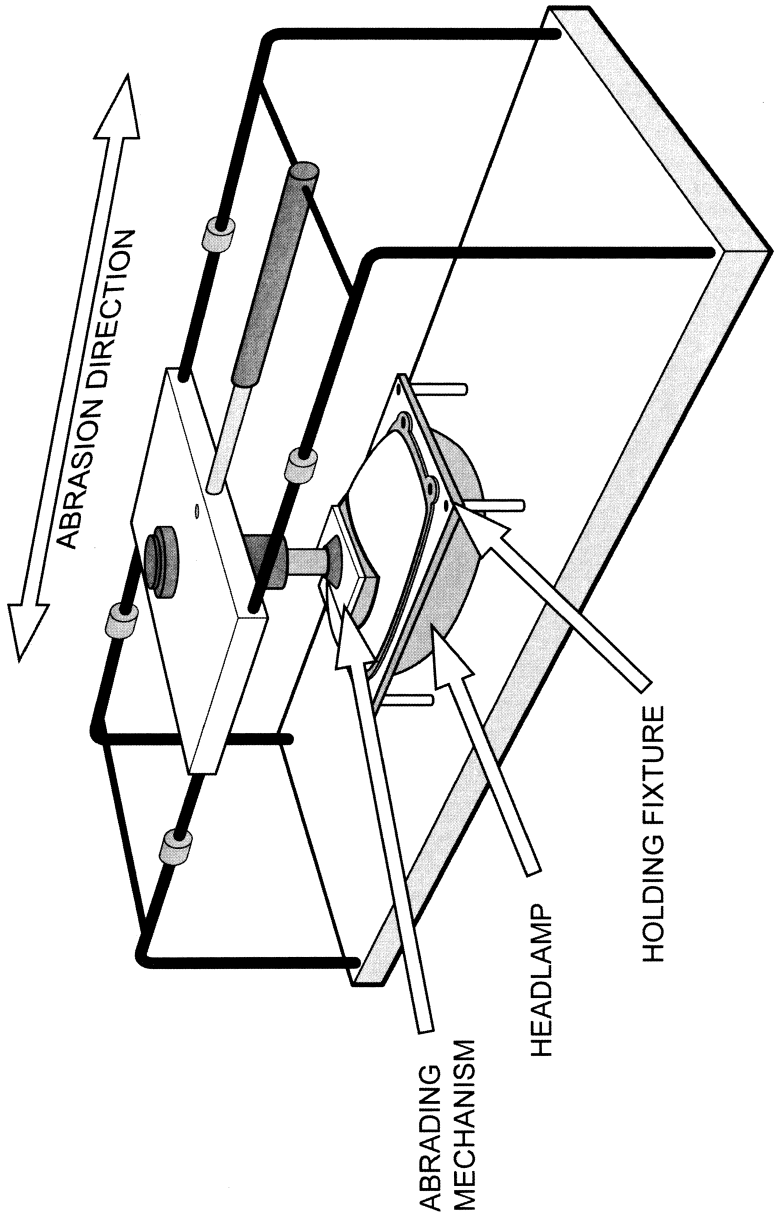

HEADLAMP ABRASION TEST FIXTURE

FIGURE 5

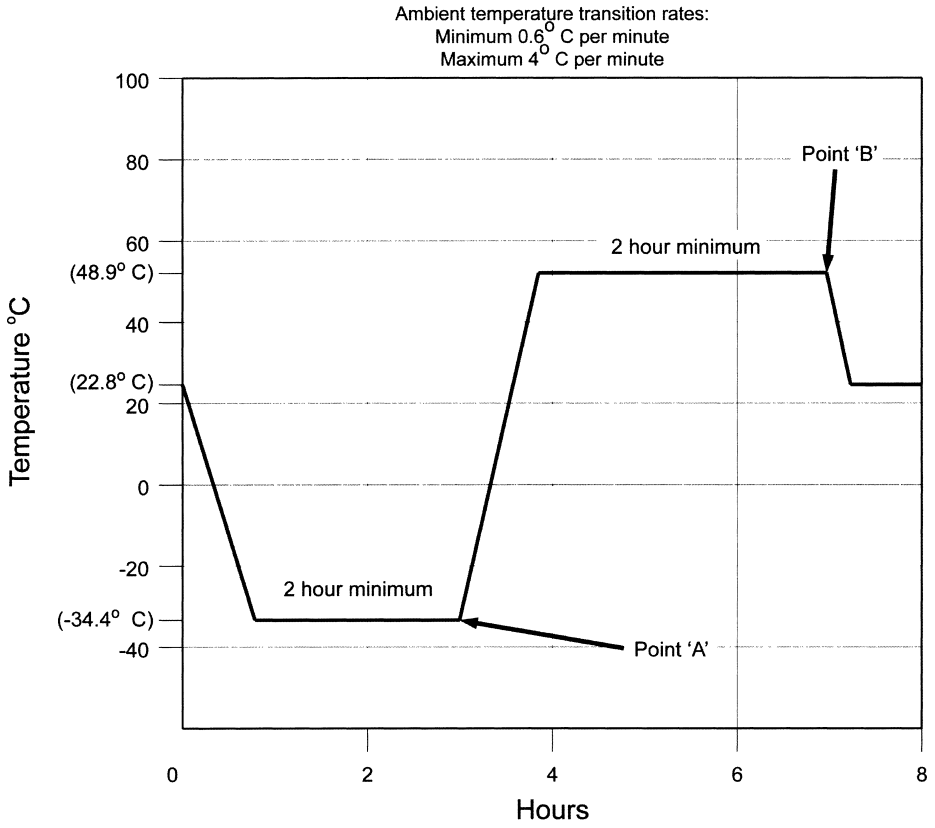

Note: Ambient conditions 23° C ± 4° and 30% RH ± 10%

THERMAL CYCLE PROFILE

FIGURE 6

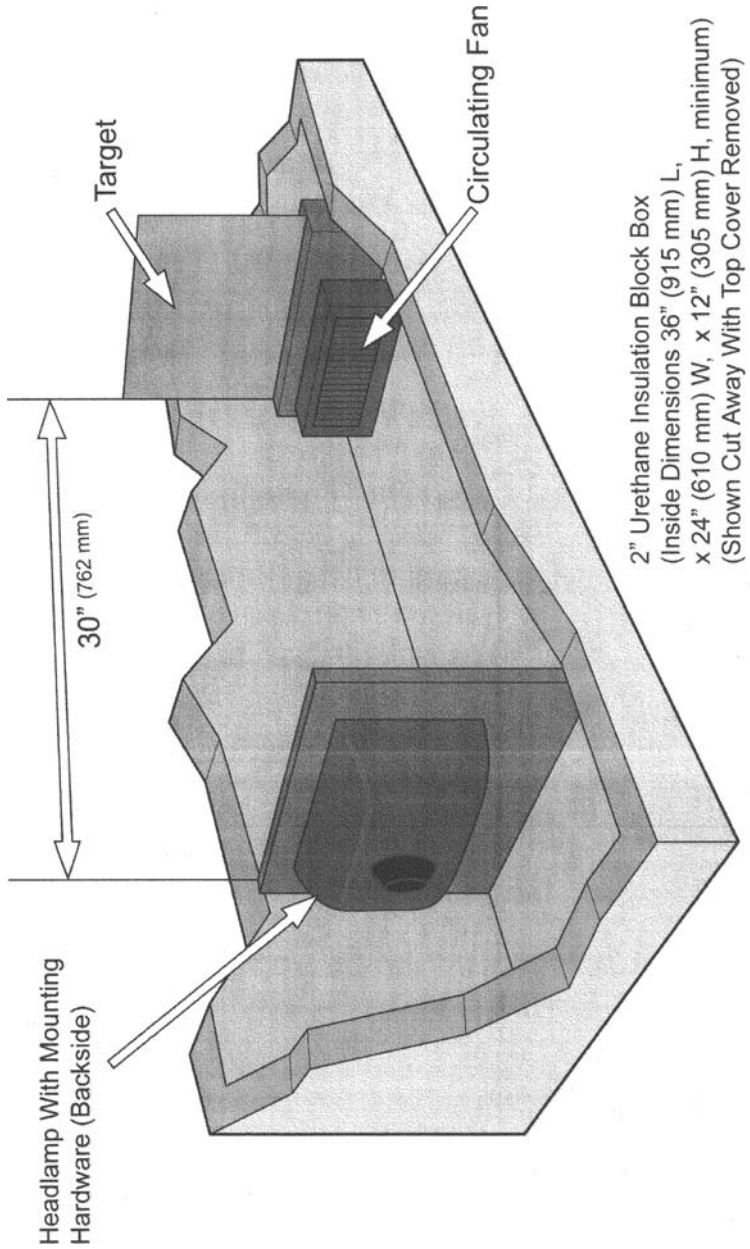

DIRT / AMBIENT TEST SETUP

FIGURE 7

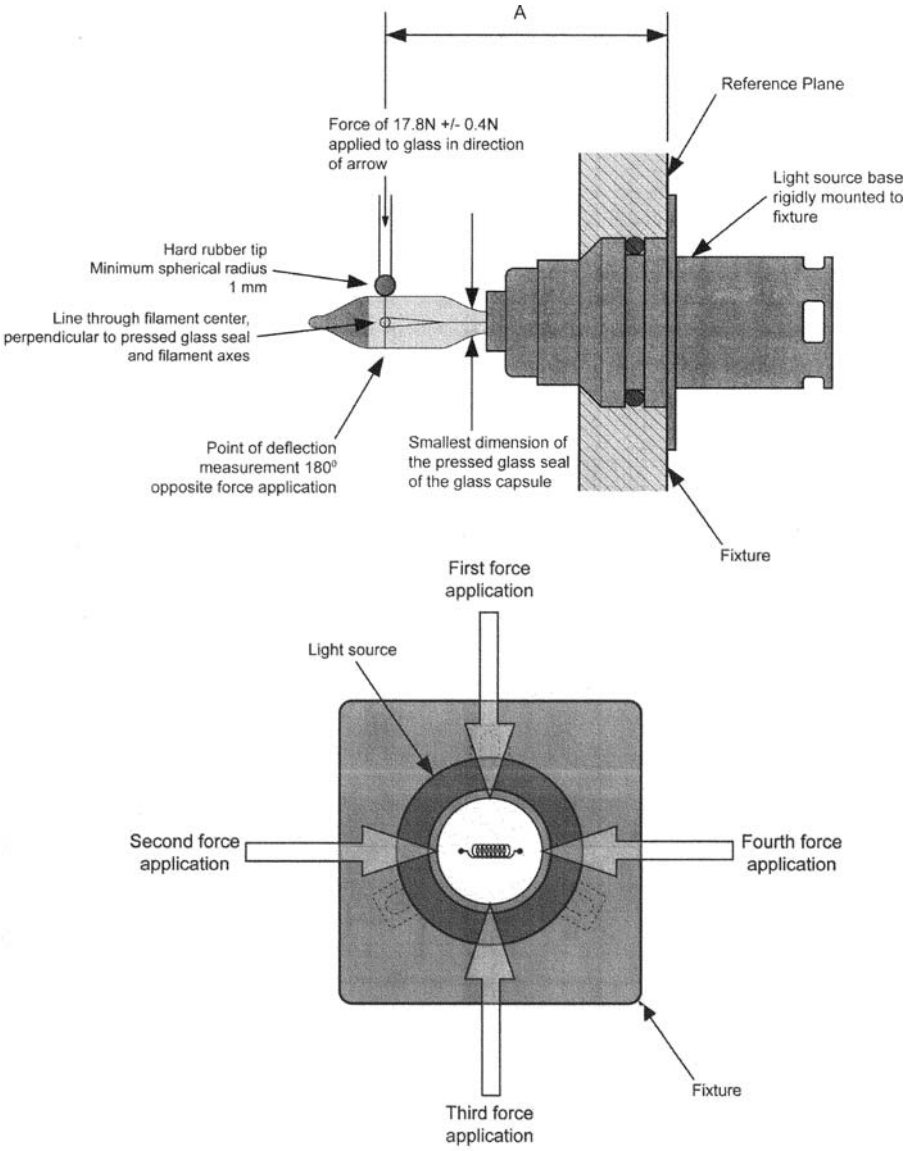

REPLACEABLE LIGHT SOURCE DEFLECTION TEST SETUP

FIGURE 8

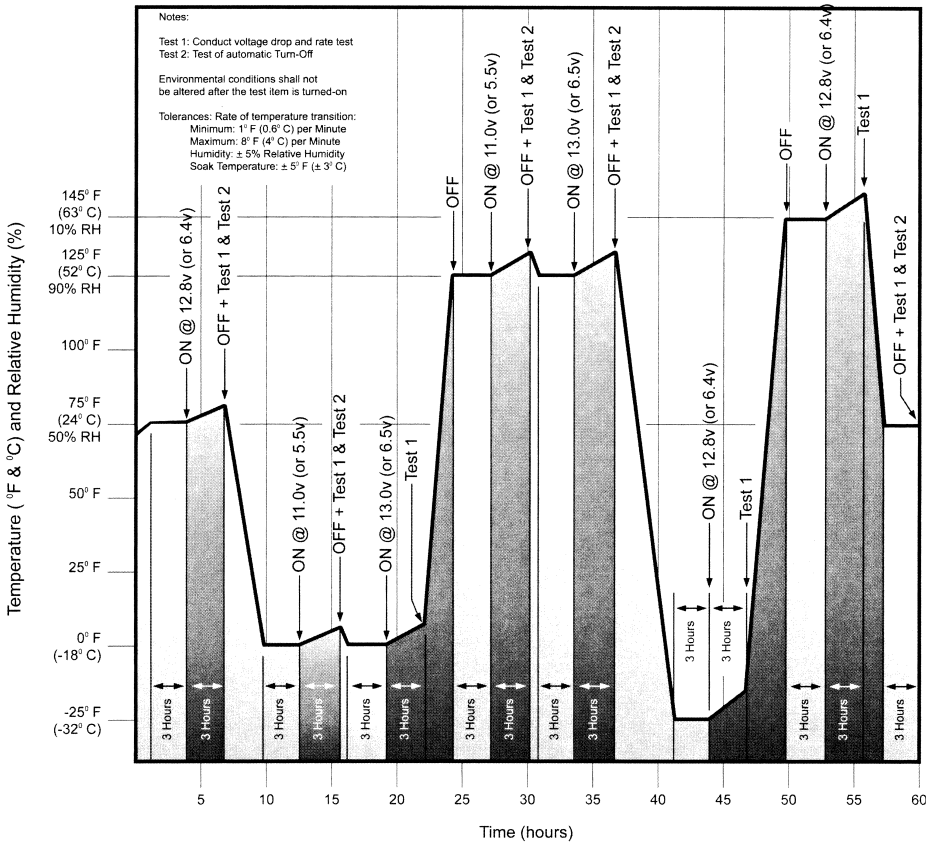

ENVIRONMENTAL TEST PROFILE

FIGURE 9

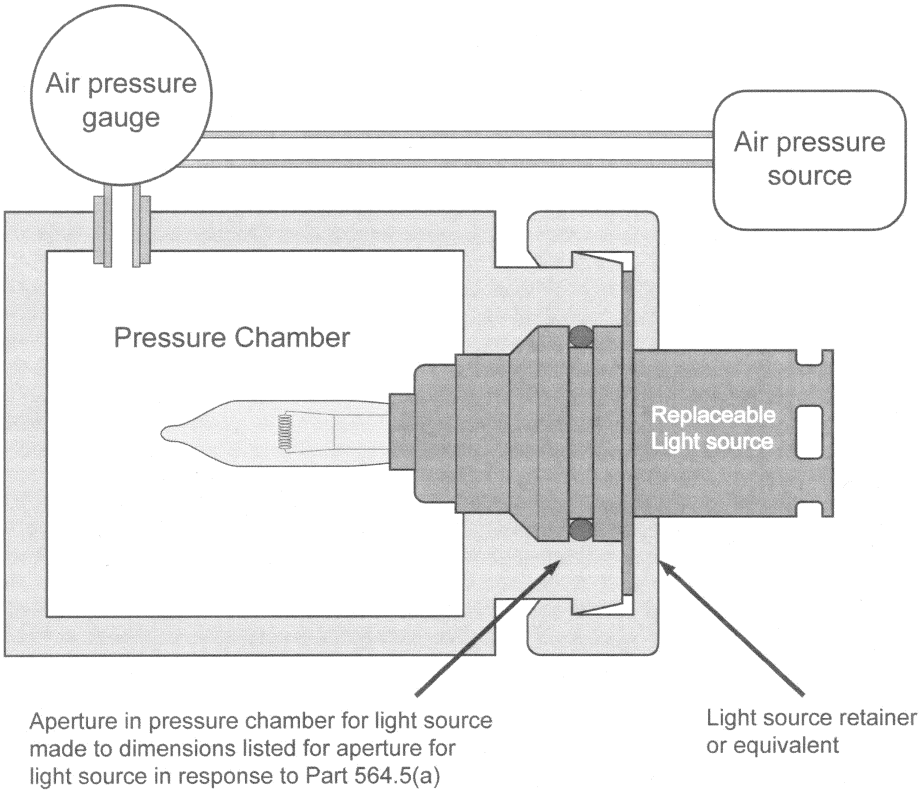

REPLACEABLE LIGHT SOURCE PRESSURE TEST SETUP

FIGURE 10

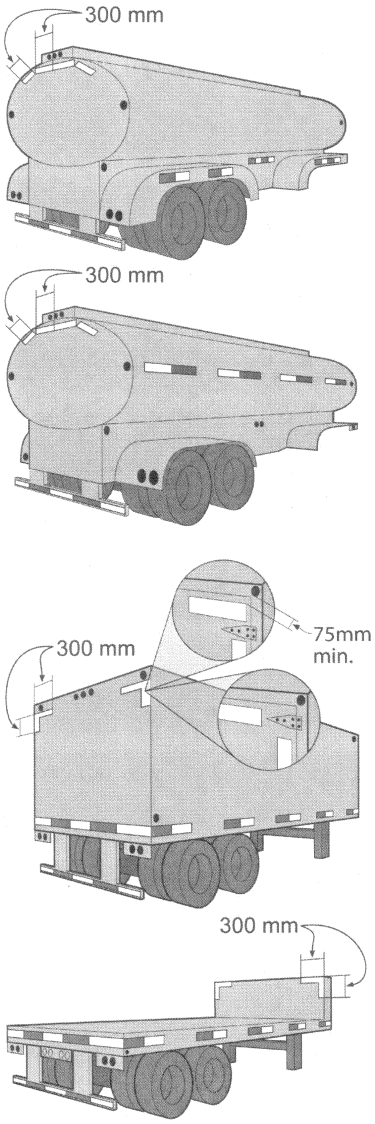

Trailer Conspicuity
Treatment Examples

FIGURE 11

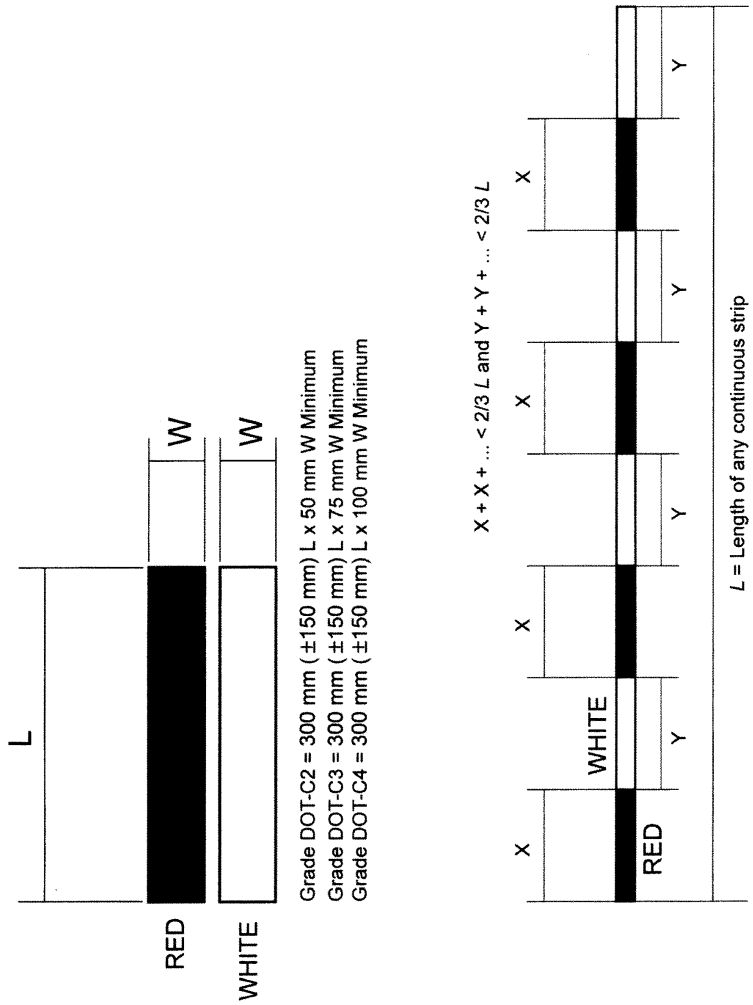

TRAILER CONSPICUITY DETAIL I

FIGURE 12-1

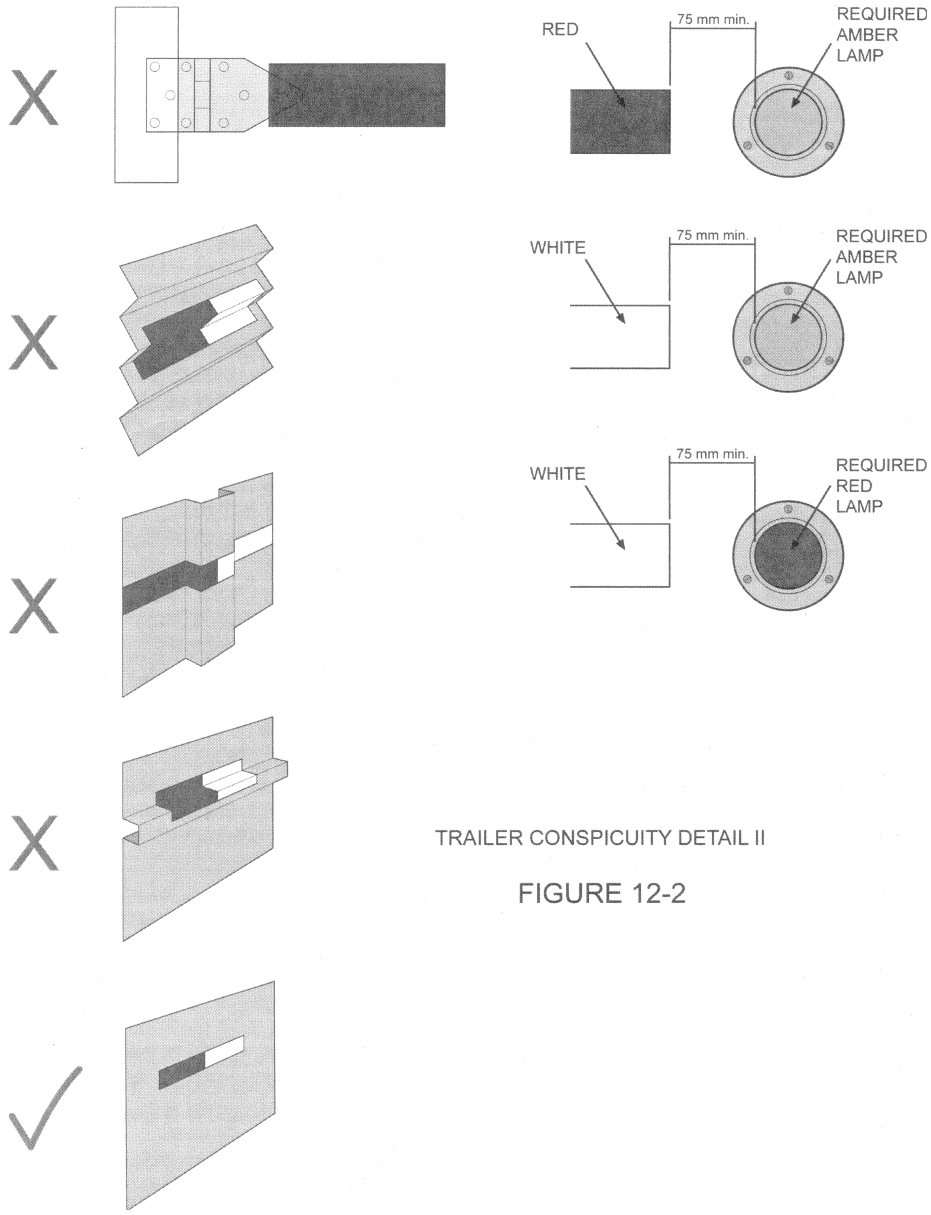

TRAILER CONSPICUITY DETAIL II

FIGURE 12-2

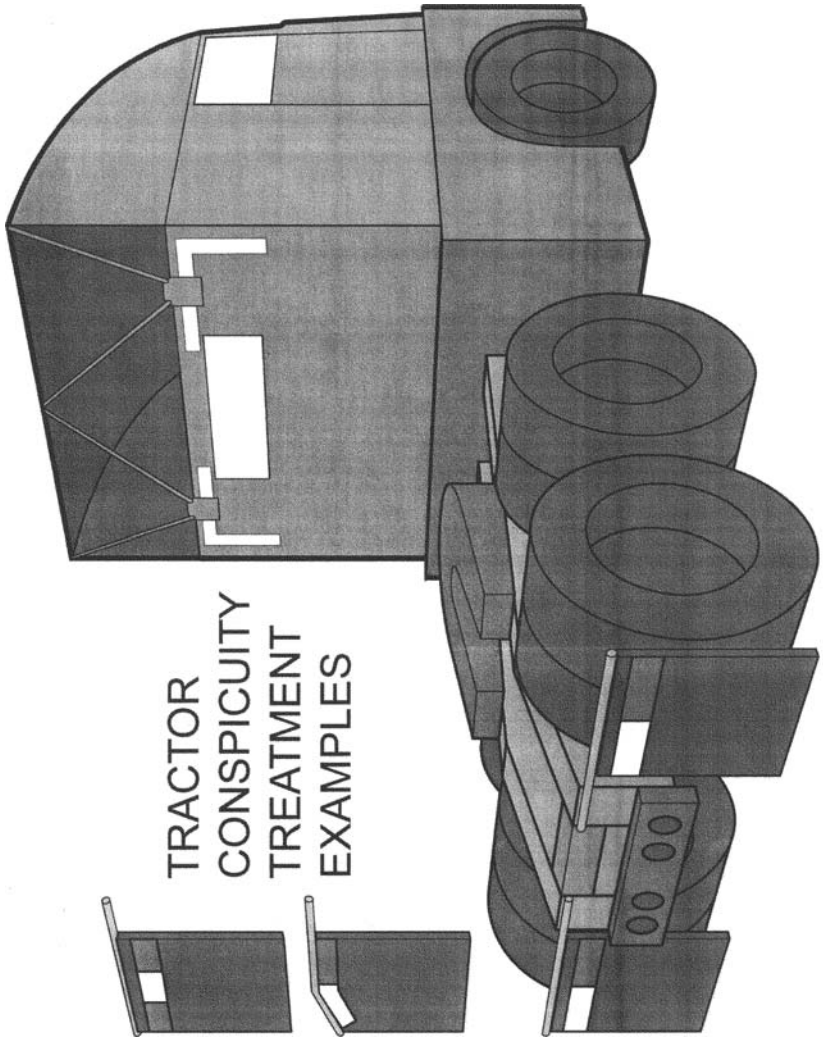

FIGURE 13

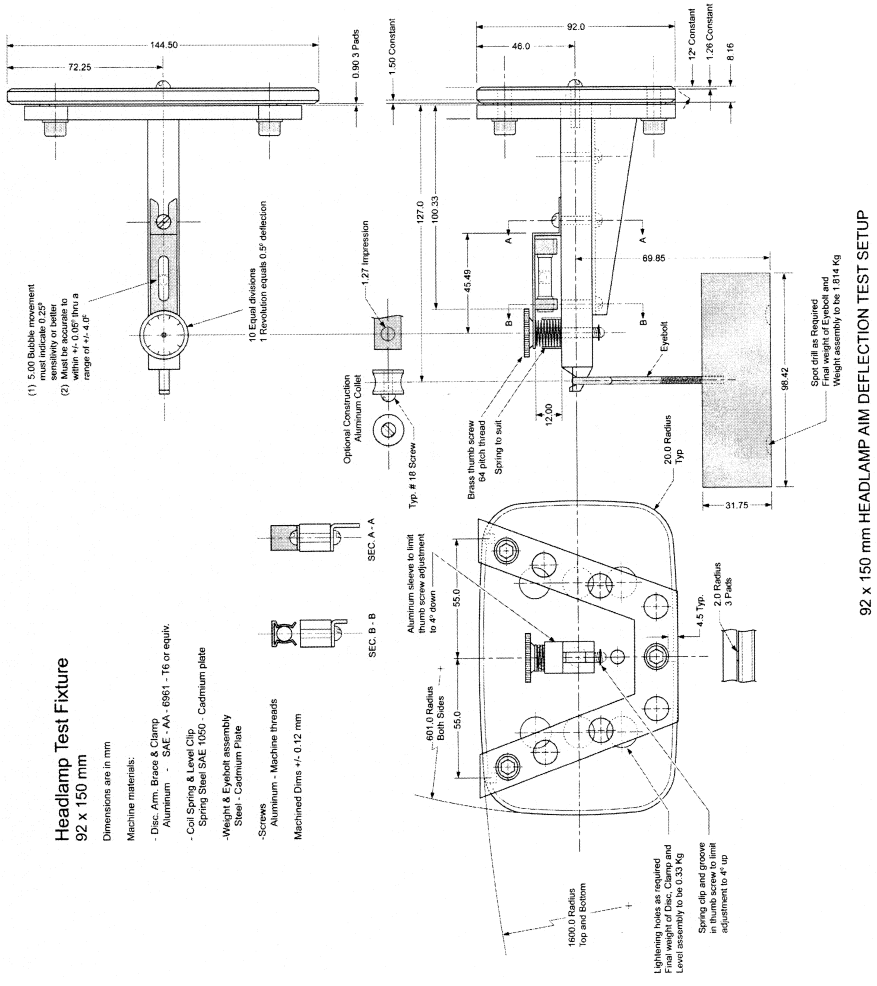

92 x 150 mm HEADLAMP AIM DEFLECTION TEST SETUP

FIGURE 14

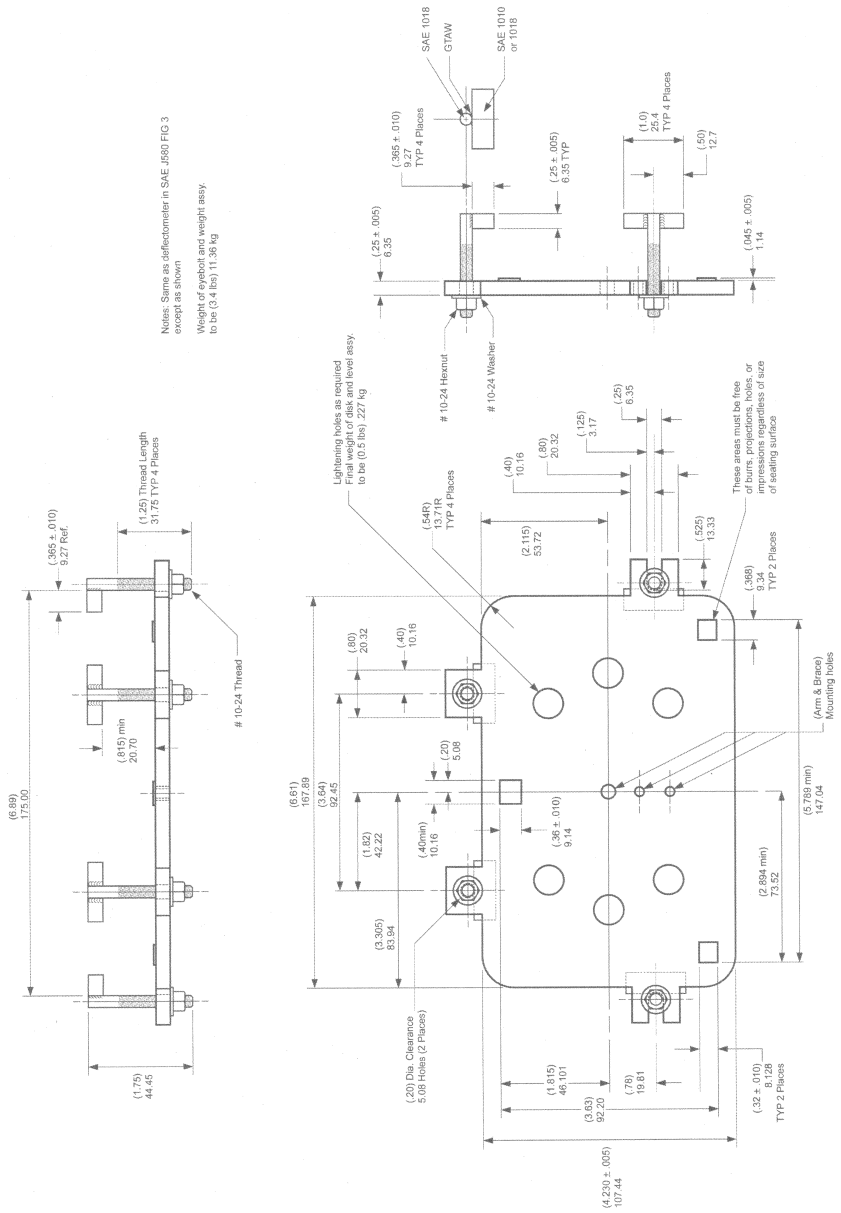

TYPES G AND H HEADLAMP AIM DEFLECTION TEST SETUP

FIGURE 15

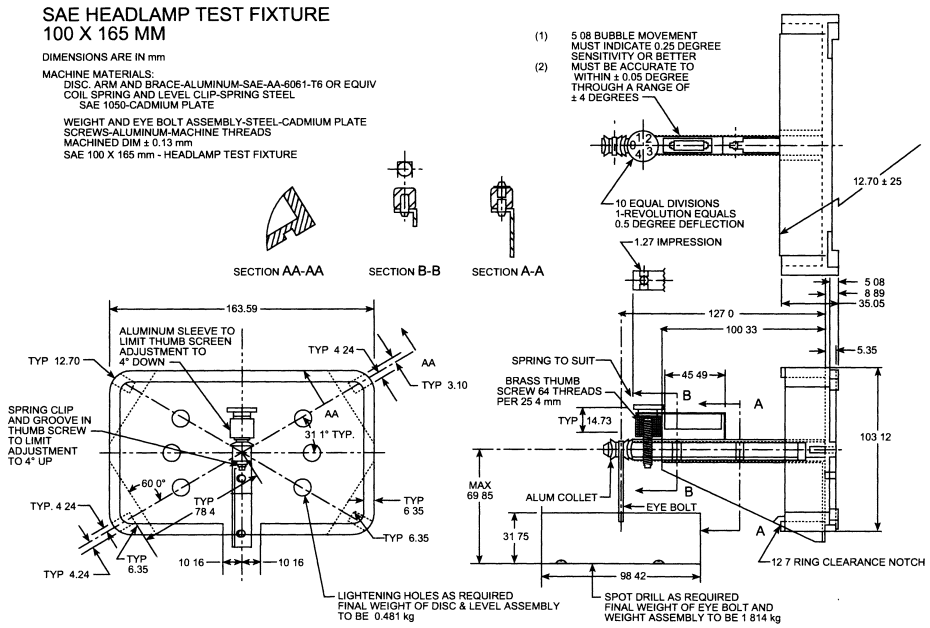

TYPES A AND E HEADLAMP AIM DEFLECTION TEST SETUP

FIGURE 16

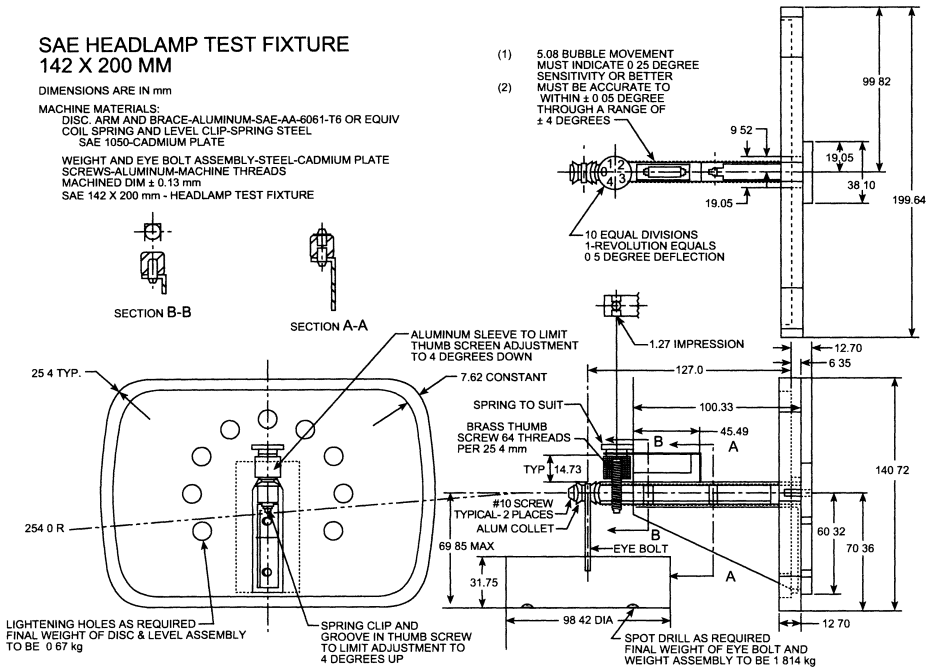

TYPE B HEADLAMP AIM DEFLECTION TEST SETUP

FIGURE 17

UNIT	A DIM	B DIM
SAE 5.75	144 53	134 62
SAE 7 00	178 31	168 66

DIMENSIONS ARE IN mm

MACHINE MATERIALS.
DISC, ARM AND BRACE-ALUMINUM-SAE-AA-6061-T6 OR EQUIV
COIL SPRING AND LEVEL CLIP-SPRING STEEL
SAE 1050-CADMIUM PLATE

WEIGHT AND EYE BOLT ASSEMBLY-STEEL-CADMIUM PLATE
SCREWS-ALUMINUM-MACHINE THREADS
MACHINED DIM ± 0.13 mm
SAE 146 AND SAE 178 - HEADLAMP TEST FIXTURE

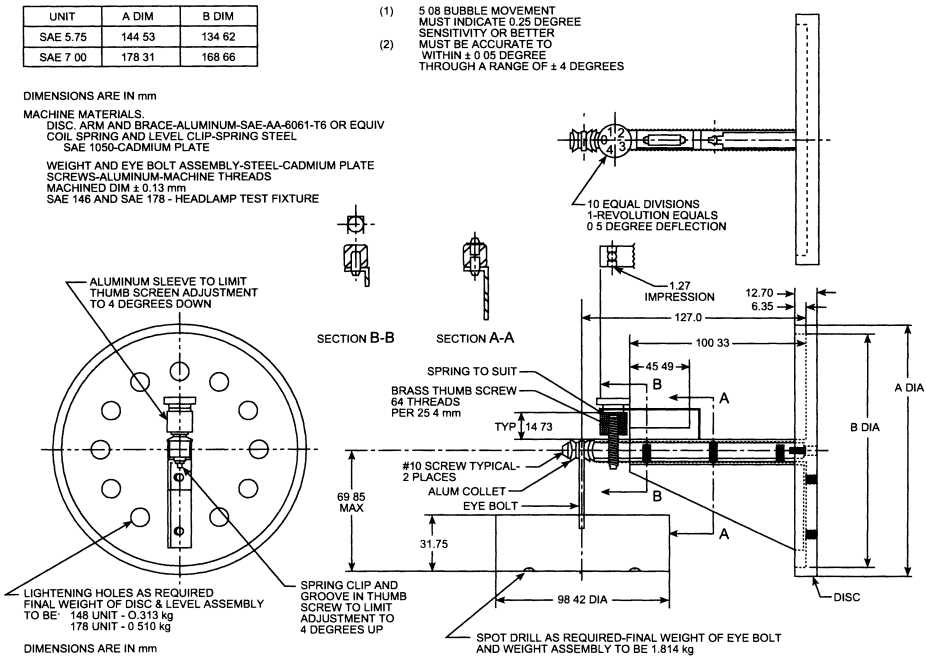

TYPES C AND D HEADLAMP AIM DEFLECTION TEST SETUP

FIGURE 18

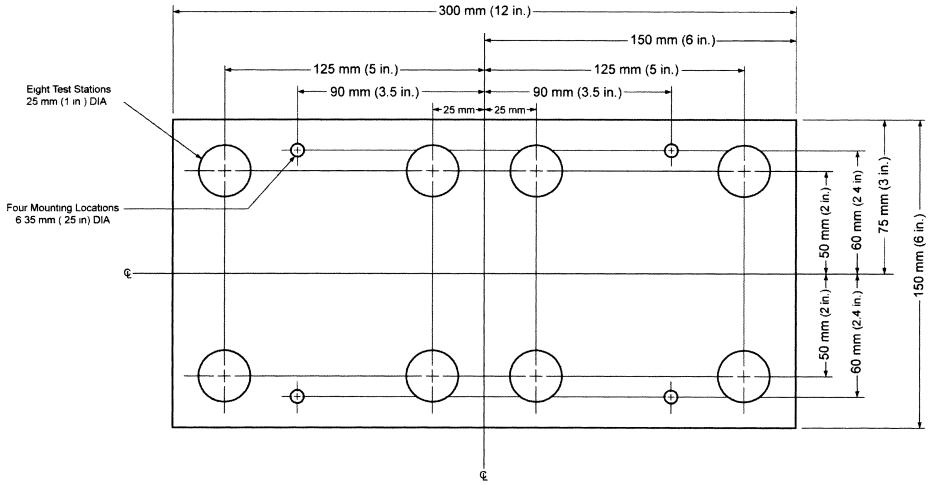

Test Plate for Vehicles other than Motorcycles and Motor Driven Cycles

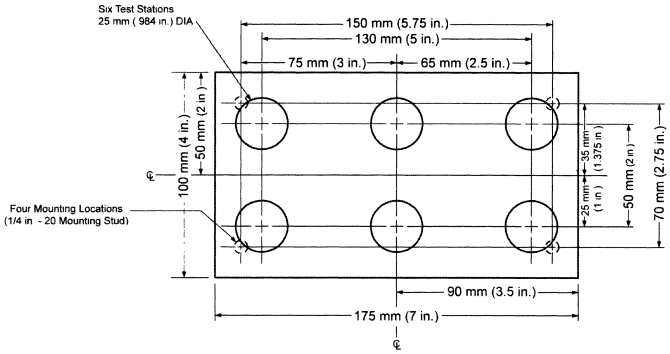

Test Plate for Motorcycles and Motor Driven Cycles

LICENSE PLATE LAMP TARGET LOCATIONS

FIGURE 19

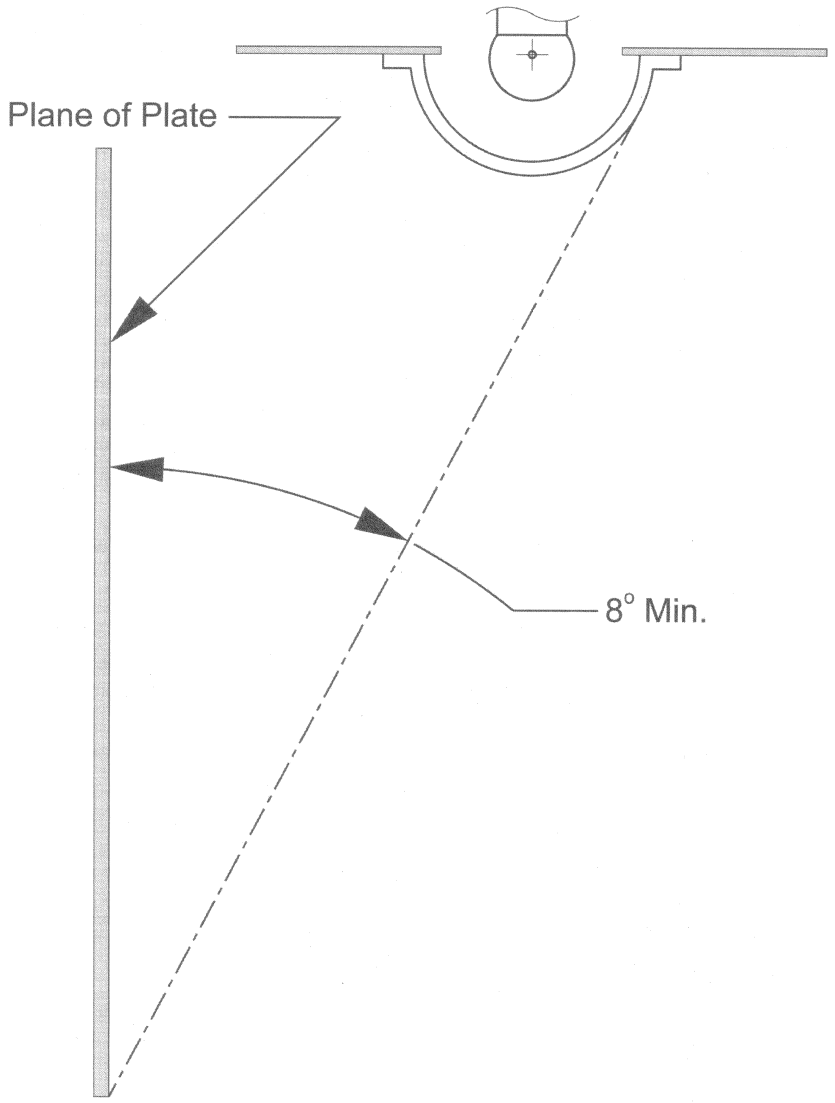

License Plate Lamp Measurement of Incident Light Angle

FIGURE 20

CAM PROFILE RADII*

Point	Radius, in.	Point	Radius, in.	Point	Radius, in.	Point	Radius, in.
1	0.5000	6	0.5504	11	0.6284	16	0.7064
2	0.5000	7	0.5660	12	0.6440	17	0.7220
3	0.5086	8	0.5816	13	0.6596	18	0.7376
4	0.5192	9	0.5972	14	0.6752	19	0.7466
5	0.5348	10	0.6128	15	0.6908	20	0.7500

* The cam width is between 1/2 and 1 in.

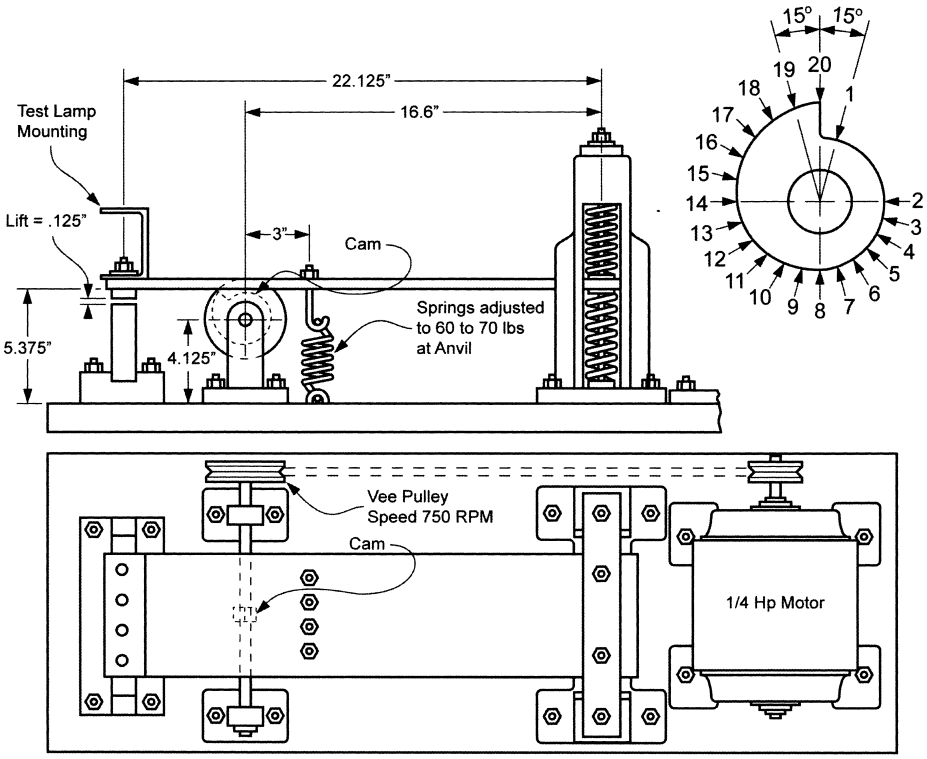

FIGURE 21 VIBRATION TEST MACHINE

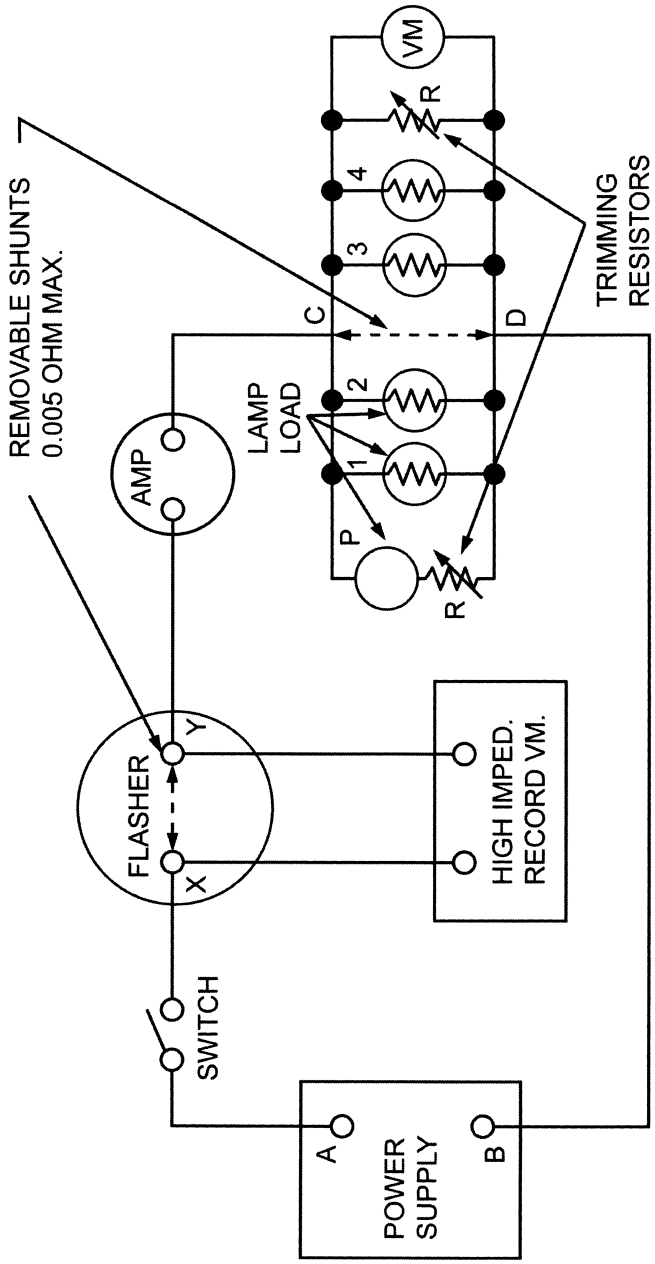

FLASHER STANDARD TEST CIRCUIT
FIGURE 22

APPENDIX TO §571.108 TABLE OF CONTENTS

S5 *References to SAE publications.*
S5.2 *Incorporation by reference.*
S6 *Vehicle requirements.*
S6.1 *Required lamps, reflective devices, and associated equipment by vehicle type.*
S6.1.1 *Quantity.*
S6.1.1.1 *Conspicuity systems.*
S6.1.1.2 *High-mounted stop lamps.*
S6.1.1.3 *Truck tractor rear turn signal lamps.*
S6.1.1.4 *Daytime running lamps.*
S6.1.2 *Color.*
S6.1.3 *Mounting location.*
S6.1.3.3 *License plate lamp.*
S6.1.3.4 *High-mounted stop lamp.*
S6.1.3.4.1 *Interior mounting.*
S6.1.3.4.2 *Accessibility.*
S6.1.3.5 *Headlamp beam mounting.*
S6.1.3.5.1 *Vertical headlamp arrangement.*
S6.1.3.5.2 *Horizontal headlamp arrangement.*
S6.1.3.6 *Auxiliary lamps mounted near identification lamps.*
S6.1.4 *Mounting height.*
S6.1.4.1 *High-mounted stop lamps.*
S6.1.5 *Activation.*
S6.1.5.1 *Hazard warning signal.*
S6.1.5.2 *Simultaneous beam activation.*
S6.2 *Impairment.*
S6.2.3 *Headlamp obstructions.*
S6.3 *Equipment combinations.*
S6.4 *Lens area, visibility and school bus signal lamp aiming.*
S6.4.1 *Effective projected luminous lens area requirements.*
S6.4.2 *Visibility.*
S6.4.3 *Visibility options.*
S6.4.3(a) *Lens area option.*
S6.4.3(b) *Luminous intensity option.*
S6.4.4 *Legacy visibility alternative.*
S6.4.5 *School bus signal lamp aiming.*
S6.5 *Marking.*
S6.5.1 *DOT marking.*
S6.5.2 *DRL marking.*
S6.5.3 *Headlamp markings.*
S6.5.3.1 *Trademark.*
S6.5.3.2 *Voltage and trade number.*
S6.5.3.3 *Sealed beam headlamp markings.*
S6.5.3.4 *Replaceable bulb headlamp markings.*
S6.5.3.5 *Additional headlamp markings.*
S6.6 *Associated equipment.*
S6.6.3 *License plate holder.*
S6.7 *Replacement equipment.*
S6.7.1 *General.*
S6.7.2 *Version of this standard.*
S7 *Signal lamp requirements.*
S7.1 *Turn signal lamps.*
S7.1.1 *Front turn signal lamps.*
S7.1.1.1 *Number.*
S7.1.1.2 *Color of light.*
S7.1.1.3 *Mounting location.*
S7.1.1.4 *Mounting height.*
S7.1.1.5 *Activation.*
S7.1.1.6 *Effective projected luminous lens area.*
S7.1.1.7 *Visibility.*
S7.1.1.8 *Indicator.*
S7.1.1.9 *Markings.*
S7.1.1.10 *Spacing to other lamps.*
S7.1.1.10.2 *Spacing measurement for non-reflector lamps.*
S7.1.1.10.3 *Spacing measurement for lamps with reflectors.*
S7.1.1.10.4 *Spacing based photometric multipliers.*
S7.1.1.11 *Multiple compartments and multiple lamps.*
S7.1.1.11.4 *Lamps installed on vehicles 2032 mm or more in overall width.*
S7.1.1.12 *Ratio to parking lamps and clearance lamps.*
S7.1.1.13 *Photometry.*
S7.1.1.14 *Physical tests.*
S7.1.2 *Rear turn signal lamps.*
S7.1.2.1 *Number.*
S7.1.2.2 *Color of light.*
S7.1.2.3 *Mounting location.*
S7.1.2.4 *Mounting height.*
S7.1.2.5 *Activation.*
S7.1.2.6 *Effective projected luminous lens area.*
S7.1.2.7 *Visibility.*
S7.1.2.8 *Indicator.*
S7.1.2.9 *Markings.*
S7.1.2.10 *Spacing to other lamps.*
S7.1.2.11 *Multiple compartments and multiple lamps.*
S7.1.2.11.4 *Lamps installed on vehicles 2032 mm or more in overall width.*
S7.1.2.12 *Ratio to taillamps and clearance lamps.*
S7.1.2.13 *Photometry.*
S7.1.2.14 *Physical tests.*
S7.1.3 *Combined lamp bulb indexing.*
S7.2 *Taillamps.*
S7.2.1 *Number.*
S7.2.2 *Color of light.*
S7.2.3 *Mounting location.*
S7.2.4 *Mounting height.*
S7.2.5 *Activation.*
S7.2.6 *Effective projected luminous lens area.*
S7.2.7 *Visibility.*
S7.2.8 *Indicator.*
S7.2.9 *Markings.*
S7.2.10 *Spacing to other lamps.*
S7.2.11 *Multiple compartments and multiple lamps.*
S7.2.11.4 *Taillamps installed on vehicles 2032 mm or more in overall width.*
S7.2.12 *Ratio.*
S7.2.13 *Photometry.*
S7.2.14 *Physical tests.*
S7.3 *Stop lamps.*
S7.3.1 *Number.*
S7.3.2 *Color of light.*
S7.3.3 *Mounting location.*
S7.3.4 *Mounting height.*
S7.3.5 *Activation.*
S7.3.6 *Effective projected luminous lens area.*
S7.3.7 *Visibility.*
S7.3.8 *Indicator.*
S7.3.9 *Markings.*
S7.3.10 *Spacing to other lamps.*
S7.3.11 *Multiple compartments and multiple lamps.*
S7.3.11.4 *Lamps installed on vehicles 2032 mm or more in overall width.*

S7.3.12 *Ratio to taillamps.*
S7.3.13 *Photometry.*
S7.3.14 *Physical tests.*
S7.3.15 *Combined lamp bulb indexing.*
S7.4 *Side marker lamps.*
S7.4.1 *Number.*
S7.4.2 *Color of light.*
S7.4.3 *Mounting location.*
S7.4.4 *Mounting height.*
S7.4.5 *Activation.*
S7.4.6 *Effective projected luminous lens area.*
S7.4.7 *Visibility.*
S7.4.8 *Indicator.*
S7.4.9 *Markings.*
S7.4.10 *Spacing to other lamps.*
S7.4.11 *Multiple compartments and multiple lamps.*
S7.4.12 *Ratio.*
S7.4.13 *Photometry.*
S7.4.13.2 *Inboard photometry.*
S7.4.14 *Physical tests.*
S7.5 *Clearance and identification lamps.*
S7.5.1 *Number.*
S7.5.2 *Color of light.*
S7.5.3 *Mounting location.*
S7.5.4 *Mounting height.*
S7.5.5 *Activation.*
S7.5.6 *Effective projected luminous lens area.*
S7.5.7 *Visibility.*
S7.5.8 *Indicator.*
S7.5.9 *Markings.*
S7.5.10 *Spacing to other lamps.*
S7.5.11 *Multiple compartments and multiple lamps.*
S7.5.12 *Ratio.*
S7.5.12.1 *Clearance lamps.*
S7.5.12.2 *Identification lamps.*
S7.5.13 *Photometry.*
S7.5.14 *Physical tests.*
S7.6 *Backup lamps.*
S7.6.1 *Number.*
S7.6.2 *Color of light.*
S7.6.3 *Mounting location.*
S7.6.4 *Mounting height.*
S7.6.5 *Activation.*
S7.6.6 *Effective projected luminous lens area.*
S7.6.7 *Visibility.*
S7.6.8 *Indicator.*
S7.6.9 *Markings.*
S7.6.10 *Spacing to other lamps.*
S7.6.11 *Multiple compartments and multiple lamps.*
S7.6.12 *Ratio.*
S7.6.13 *Photometry.*
S7.6.14 *Physical tests.*
S7.7 *License plate lamps.*
S7.7.1 *Number.*
S7.7.2 *Color of light.*
S7.7.3 *Mounting location.*
S7.7.4 *Mounting height.*
S7.7.5 *Activation.*
S7.7.6 *Effective projected luminous lens area.*
S7.7.7 *Visibility.*
S7.7.8 *Indicator.*
S7.7.9 *Markings.*
S7.7.10 *Spacing to other lamps.*
S7.7.11 *Multiple compartments and multiple lamps.*
S7.7.12 *Ratio.*
S7.7.13 *Photometry.*
S7.7.14 *Physical tests.*
S7.7.15 *Installation.*
S7.7.15.4 *Incident light from single lamp.*
S7.7.15.5 *Incident light from multiple lamps.*
S7.8 *Parking lamps.*
S7.8.1 *Number.*
S7.8.2 *Color of light.*
S7.8.3 *Mounting location.*
S7.8.4 *Mounting height.*
S7.8.5 *Activation.*
S7.8.6 *Effective projected luminous lens area.*
S7.8.7 *Visibility.*
S7.8.8 *Indicator.*
S7.8.9 *Markings.*
S7.8.10 *Spacing to other lamps.*
S7.8.11 *Multiple compartments and multiple lamps.*
S7.8.12 *Ratio.*
S7.8.13 *Photometry.*
S7.8.14 *Physical tests.*
S7.9 *High-mounted stop lamps.*
S7.9.1 *Number.*
S7.9.2 *Color of light.*
S7.9.3 *Mounting location.*
S7.9.4 *Mounting height.*
S7.9.5 *Activation.*
S7.9.6 *Effective projected luminous lens area.*
S7.9.7 *Visibility.*
S7.9.8 *Indicator.*
S7.9.9 *Markings.*
S7.9.10 *Spacing to other lamps.*
S7.9.11 *Multiple compartments and multiple lamps.*
S7.9.12 *Ratio.*
S7.9.13 *Photometry.*
S7.9.14 *Physical tests.*
S7.10 *Daytime running lamps (DRLs).*
S7.10.1 *Number.*
S7.10.2 *Color of light.*
S7.10.3 *Mounting location.*
S7.10.4 *Mounting height.*
S7.10.5 *Activation.*
S7.10.6 *Effective projected luminous lens area.*
S7.10.7 *Visibility.*
S7.10.8 *Indicator.*
S7.10.9 *Markings.*
S7.10.10 *Spacing to other lamps.*
S7.10.10.1 *Spacing to turn signal lamps.*
S7.10.11 *Multiple compartments and multiple lamps.*
S7.10.12 *Ratio.*
S7.10.13 *Photometry.*
S7.10.14 *Physical tests.*
S7.11 *School bus signal lamps.*
S7.11.1 *Number.*
S7.11.2 *Color of light.*
S7.11.3 *Mounting location.*
S7.11.4 *Mounting height.*
S7.11.5 *Activation.*
S7.11.6 *Effective projected luminous lens area.*
S7.11.7 *Visibility.*
S7.11.8 *Indicator.*
S7.11.9 *Markings.*
S7.11.10 *Spacing to other lamps.*
S7.11.11 *Multiple compartments and multiple lamps.*

S7.11.12 *Ratio.*
S7.11.13 *Photometry.*
S7.11.14 *Physical tests.*
S8 *Reflective device requirements.*
S8.1 *Reflex reflectors.*
S8.1.1 *Number.*
S8.1.2 *Color.*
S8.1.3 *Mounting location.*
S8.1.4 *Mounting height.*
S8.1.5 *Activation.*
S8.1.6 *Effective projected luminous lens area.*
S8.1.7 *Visibility.*
S8.1.8 *Indicator.*
S8.1.9 *Markings.*
S8.1.10 *Spacing to other lamps or reflective devices.*
S8.1.11 *Photometry.*
S8.1.12 *Physical tests.*
S8.1.13 *Alternative side reflex reflector material.*
S8.2 *Conspicuity systems.*
S8.2.1 *Retroreflective sheeting.*
S8.2.1.2 *Retroreflective sheeting material.*
S8.2.1.3 *Certification marking.*
S8.2.1.4 *Application pattern.*
S8.2.1.4.1 *Alternating red and white materials.*
S8.2.1.5 *Application location.*
S8.2.1.6 *Application spacing.*
S8.2.1.7 *Photometry.*
S8.2.2 *Conspicuity reflex reflectors.*
S8.2.2.1 *Certification marking.*
S8.2.2.2 *Application pattern.*
S8.2.2.2.1 *Alternating red and white materials.*
S8.2.2.2.2 *White material.*
S8.2.2.3 *Photometry.*
S8.2.3 *Conspicuity system installation on trailers.*
S8.2.3.1 *Trailer rear.*
S8.2.3.1.1 *Element 1-alternating red and white materials.*
S8.2.3.1.2 *Element 2-white.*
S8.2.3.1.3 *Element 3-alternating red and white materials.*
S8.2.3.2 *Trailer side-alternating red and white materials.*
S8.2.4 *Conspicuity system installation on truck tractors.*
S8.2.4.1 *Element 1-alternating red and white materials.*
S8.2.4.2 *Element 2-white.*
S9 *Associated equipment requirements.*
S9.1 *Turn signal operating unit.*
S9.1.2 *Physical tests.*
S9.2 *Turn signal flasher.*
S9.2.2 *Physical tests.*
S9.3 *Turn signal pilot indicator.*
S9.3.4 *Indicator size and color.*
S9.3.6 *Turn signal lamp failure.*
S9.4 *Headlamp beam switching device.*
S9.4.1 *Semi-automatic headlamp beam switching device.*
S9.4.1.1 *Operating instructions.*
S9.4.1.2 *Manual override.*
S9.4.1.3 *Fail safe operation.*
S9.4.1.4 *Automatic dimming indicator.*
S9.4.1.5 *Lens accessibility.*
S9.4.1.6 *Mounting height.*
S9.4.1.7 *Physical tests.*
S9.5 *Upper beam headlamp indicator.*
S9.5.1 *Indicator size and location.*
S9.6 *Vehicular hazard warning signal operating unit.*
S9.6.2 *Operating unit switch.*
S9.6.3 *Physical tests.*
S9.7 *Vehicular hazard warning signal flasher.*
S9.7.2 *Physical tests.*
S9.8 *Vehicular hazard warning signal pilot indicator.*
S9.8.4 *Indicator size and color.*
S10 *Headlighting system requirements.*
S10.1 *Vehicle headlighting systems.*
S10.2 *Aiming.*
S10.3 *Number.*
S10.4 *Color of light.*
S10.5 *Mounting location.*
S10.6 *Mounting height.*
S10.7 *Activation.*
S10.8 *Effective projected luminous lens area.*
S10.9 *Visibility.*
S10.10 *Indicator.*
S10.11 *Markings.*
S10.12 *Spacing to other lamps.*
S10.13 *Sealed beam headlighting systems.*
S10.13.1 *Installation.*
S10.13.2 *Simultaneous aim.*
S10.13.3 *Photometry.*
S10.13.4 *Physical tests.*
S10.14 *Integral beam headlighting systems.*
S10.14.1 *Installation.*
S10.14.2 *Aimability.*
S10.14.3 *Simultaneous aim.*
S10.14.4 *Markings.*
S10.14.5 *Additional light sources.*
S10.14.6 *Photometry.*
S10.14.7 *Physical tests.*
S10.15 *Replaceable bulb headlighting systems.*
S10.15.1 *Installation.*
S10.15.2 *Aiming restrictions.*
S10.15.3 *Replacement lens reflector units.*
S10.15.4 *Markings.*
S10.15.5 *Additional light sources.*
S10.15.6 *Photometry.*
S10.15.7 *Physical tests.*
S10.16 *Combination headlighting systems.*
S10.16.1 *Installation.*
S10.16.2 *Photometry.*
S10.16.3 *Physical tests.*
S10.17 *Motorcycle headlighting systems.*
S10.17.1 *Installation.*
S10.17.1.1 *Single headlamp.*
S10.17.1.2 *Two headlamps with both beams.*
S10.17.1.3 *Two headlamps, upper beam and lower beam.*
S10.17.2 *Motorcycle replaceable bulb headlamp marking.*
S10.17.3 *Photometry.*
S10.17.4 *Physical tests.*
S10.17.5 *Motorcycle headlamp modulation system.*
S10.17.5.1. *Modulation.*
S10.17.5.2 *Replacement modulators.*
S10.17.5.2.1 *Replacement performance.*
S10.17.5.2.2 *Replacement instructions.*

S14.4.1.3.2.3 *White.*
S14.4.1.4 *Tristimulus method.*
S14.4.1.4.1 *Tristimulus method procedure.*
S14.4.1.4.2 *Tristimulus method performance requirements.*
S14.4.1.4.2.1 *Red.*
S14.4.1.4.2.2 *Yellow (Amber).*
S14.4.1.4.2.3 *White (achromatic).*
S14.4.2 *Plastic optical materials tests.*
S14.4.2.1 *Samples.*
S14.4.2.2 *Outdoor exposure test.*
S14.4.2.2.3 *Procedure.*
S14.4.2.2.4 *Performance requirements.*
S14.4.2.3 *Heat test.*
S14.4.2.3.1 *Procedure.*
S14.4.2.3.2 *Performance requirements.*
S14.5 *Signal lamp and reflective device physical test procedures and performance requirements.*
S14.5.1 *Vibration test.*
S14.5.1.1 *Procedure.*
S14.5.1.2 *Performance requirements.*
S14.5.2 *Moisture test.*
S14.5.2.1 *Procedure.*
S14.5.2.2 *Performance requirements.*
S14.5.3 *Dust test.*
S14.5.3.1 *Samples.*
S14.5.3.2 *Procedure.*
S14.5.3.3 *Performance requirements.*
S14.5.4 *Corrosion test.*
S14.5.4.1 *Procedure.*
S14.5.4.2 *Performance requirements.*
S14.6 *Headlamp physical test procedures and performance requirements.*
S14.6.1 *Abrasion test.*
S14.6.1.1 *Procedure.*
S14.6.1.1.1 *Abrading pad.*
S14.6.1.1.2 *Abrading pad alignment.*
S14.6.1.1.3 *Abrasion test procedure.*
S14.6.1.2 *Performance requirements.*
S14.6.2 *Chemical resistance test.*
S14.6.2.1 *Procedure.*
S14.6.2.1.1 *Test fluids.*
S14.6.2.1.2 *Fluid application.*
S14.6.2.1.3 *Test duration.*
S14.6.2.2 *Performance requirements.*
S14.6.3 *Corrosion test.*
S14.6.3.1 *Procedure.*
S14.6.3.2 *Performance requirements.*
S14.6.4 *Corrosion-connector test.*
S14.6.4.1 *Procedure.*
S14.6.4.2 *Performance requirements.*
S14.6.5 *Dust test.*
S14.6.5.1 *Procedure.*
S14.6.5.2 *Performance requirements.*
S14.6.6 *Temperature cycle test and internal heat test.*
S14.6.6.1 *Samples.*
S14.6.6.2 *General procedure.*
S14.6.6.3 *Temperature cycle test.*
S14.6.6.3.1 *Procedure.*
S14.6.6.3.2 *Performance requirements.*
S14.6.6.4 *Internal heat test.*
S14.6.6.4.1 *Procedure.*
S14.6.6.4.2 *Performance requirements.*
S14.6.7 *Humidity test.*
S14.6.7.1 *Procedure.*
S14.6.7.2 *Performance requirements.*
S14.6.8 *Vibration test.*
S14.6.8.1 *Samples.*
S14.6.8.2 *Procedure.*
S14.6.8.3 *Performance requirements.*
S14.6.9 *Sealing test.*
S14.6.9.1 *Procedure.*
S14.6.9.2 *Performance requirements.*
S14.6.10 *Chemical resistance test of reflectors of replaceable lens headlamps.*
S14.6.10.1 *Procedure.*
S14.6.10.1.1 *Test fluids.*
S14.6.10.1.2 *Fluid application.*
S14.6.10.1.3 *Test duration.*
S14.6.10.2 *Performance requirements.*
S14.6.11 *Corrosion resistance test of reflectors of replaceable lens headlamps.*
S14.6.11.1 *Procedure.*
S14.6.11.2 *Performance requirements.*
S14.6.12 *Inward force test.*
S14.6.12.1 *Procedure.*
S14.6.12.2 *Performance requirements.*
S14.6.13 *Torque deflection test.*
S14.6.13.1 *Procedure.*
S14.6.13.2 *Performance requirements.*
S14.6.14 *Retaining ring test.*
S14.6.14.1 *Procedure.*
S14.6.14.2 *Performance requirements.*
S14.6.15 *Headlamp connector test.*
S14.6.15.1 *Procedure.*
S14.6.15.2 *Performance requirements.*
S14.6.16 *Headlamp wattage test.*
S14.6.16.1 *Procedure.*
S14.6.16.2 *Performance requirements.*
S14.6.17 *Aiming adjustment test-laboratory.*
S14.6.17.1 *Procedure.*
S14.6.17.2 *Performance requirements.*
S14.6.18 *Aiming adjustment test-on vehicle.*
S14.6.18.1 *Procedure.*
S14.6.18.2 *Performance requirements.*
S14.7 *Replaceable light source physical test procedures and performance requirements.*
S14.7.1 *Deflection test for replaceable light sources.*
S14.7.1.1 *Procedure.*
S14.7.1.2 *Performance requirements.*
S14.7.2 *Pressure test for replaceable light sources.*
S14.7.2.1 *Procedure.*
S14.7.2.2 *Performance requirements.*
S14.7.3 *Replaceable light source power and flux measurement procedure.*
S14.7.3.1 *Seasoning.*
S14.7.3.1.1 *Resistive filament source.*
S14.7.3.1.2 *Discharge source.*
S14.7.3.2 *Test voltage.*
S14.7.3.3 *Luminous flux measurement.*
S14.7.3.3.3.2 *Discharge light source setup.*
S14.8 *Vehicle headlamp aiming devices (VHAD) physical test procedures and performance requirements.*
S14.8.1 *Samples.*
S14.8.2 *Scale graduation test.*
S14.8.2.1 *Procedure.*
S14.8.2.2 *Performance requirements.*
S14.8.3 *Cold scale graduation test.*
S14.8.3.1 *Procedure.*

§ 571.109 Standard No. 109; New pneumatic and certain specialty tires.

S1. *Scope*. This standard specifies tire dimensions and laboratory test requirements for bead unseating resistance, strength, endurance, and high speed performance; defines tire load ratings; and specifies labeling requirements for passenger car tires.

S2 *Application*. This standard applies to new pneumatic radial tires for use on passenger cars manufactured before 1975, new pneumatic bias ply tires, T-type spare tires, ST, FI, and 8–12 rim diameter and below tires for use on passenger cars manufactured after 1948. However, it does not apply to any tire that has been so altered so as to render impossible its use, or its repair for use, as motor vehicle equipment.

S3. *Definitions*.

Bead means that part of the tire made of steel wires, wrapped or reinforced by ply cords, that is shaped to fit the rim.

Bead separation means a breakdown of bond between components in the bead area.

Bias ply tire means a pneumatic tire in which the ply cords that extend to the beads are laid at alternate angles substantially less than 90° to the centerline of the tread.

Carcass means the tire structure, except tread and sidewall rubber.

Chunking means the breaking away of pieces of the tread or sidewall.

Cord means the strands forming the plies in the tire.

Cord separation means cords parting away from adjacent rubber compounds.

Cracking means any parting within the tread, sidewall, or innerliner of the tire extending to cord material.

§ 571.109 Standard No. 109; New pneumatic and certain specialty tires.

S1. *Scope*. This standard specifies tire dimensions and laboratory test requirements for bead unseating resistance, strength, endurance, and high speed performance; defines tire load ratings; and specifies labeling requirements for passenger car tires.

S2 *Application*. This standard applies to new pneumatic radial tires for use on passenger cars manufactured before 1975, new pneumatic bias ply tires, T-type spare tires, ST, FI, and 8–12 rim diameter and below tires for use on passenger cars manufactured after 1948. However, it does not apply to any tire that has been so altered so as to render impossible its use, or its repair for use, as motor vehicle equipment.

S3. *Definitions*.

Bead means that part of the tire made of steel wires, wrapped or reinforced by ply cords, that is shaped to fit the rim.

Bead separation means a breakdown of bond between components in the bead area.

Bias ply tire means a pneumatic tire in which the ply cords that extend to the beads are laid at alternate angles substantially less than 90° to the centerline of the tread.

Carcass means the tire structure, except tread and sidewall rubber.

Chunking means the breaking away of pieces of the tread or sidewall.

Cord means the strands forming the plies in the tire.

Cord separation means cords parting away from adjacent rubber compounds.

Cracking means any parting within the tread, sidewall, or innerliner of the tire extending to cord material.

CT means a pneumatic tire with an inverted flange tire and rim system in which the rim is designed with rim flanges pointed radially inward and the tire is designed to fit on the underside of the rim in a manner that encloses the rim flanges inside the air cavity of the tire.

Groove means the space between two adjacent tread ribs.

Innerliner means the layer(s) forming the inside surface of a tubeless tire that contains the inflating medium within the tire.

Innerliner separation means the parting of the innerliner from cord material in the carcass.

Load rating means the maximum load a tire is rated to carry for a given inflation pressure.

Maximum permissible inflation pressure means the maximum cold inflation pressure to which a tire may be inflated.

Maximum load rating means the load rating at the maximum permissible inflation pressure for that tire.

Open splice means any parting at any junction of tread, sidewall, or innerliner that extends to cord material.

Overall width means the linear distance between the exteriors of the sidewalls of an inflated tire, including elevations due to labeling, decorations, or protective bands or ribs.

Ply means a layer of rubber-coated parallel cords.

Ply separation means a parting of rubber compound between adjacent plies.

Pneumatic tire means a mechanical device made of rubber, chemicals, fabric and steel or other materials, which, when mounted on an automotive wheel, provides the traction and contains the gas or fluid that sustains the load.

Radial ply tire means a pneumatic tire in which the ply cords which extend to the beads are laid at substantially 90° to the centerline of the tread.

Rim means a metal support for a tire or a tire and tube assembly upon which the tire beads are seated.

Section width means the linear distance between the exteriors of the sidewalls of an inflated tire, excluding elevations due to labeling, decoration, or protective bands.

Sidewall means that portion of a tire between the tread and the bead.

Sidewall separation means the parting of the rubber compound from the cord material in the sidewall.

Test rim means, with reference to a tire to be tested, any rim that is listed as appropriate for use with that tire in accordance with S4.4. For purposes of this section and §571.110, each rim listing shall include dimensional specifications and a diagram of the rim.

Tread means that portion of a tire that comes into contact with the road.

Tread rib means a tread section running circumferentially around a tire.

Tread separation means pulling away of the tread from the tire carcass.

S4. *Requirements.*

S4.1 *Size and construction.* Each tire shall be designed to fit each rim specified for its size designation in each reference cited in the definition of *test rim* in S3.

S4.2 *Performance requirements.*

S4.2.1 *General.* Each tire shall conform to each of the following:

(a) It shall meet the requirements specified in S4.2.2 for its tire size designation, type, and maximum permissible inflation pressure.

(b) Its maximum permissible inflation pressure shall be either 32, 36, 40, or 60 psi, or 240, 280, 300, 340, or 350 kPa. For a CT tire, the maximum permissible inflation pressure shall be either 290, 330, 350, or 390 kPa.

(c) Its load rating shall be that specified in a submission made by an individual manufacturer, pursuant to S4.4.1(a), or in one of the publications described in S4.4.1(b) for its size designation, type and each appropriate inflation pressure. If the maximum load rating for a particular tire size is shown in more than one of the publications described in S4.4.1(b), each tire of that size designation shall have a maximum load rating that is not less than

the published maximum load rating, or if there are differing maximum load ratings for the same tire size designation, not less than the lowest published maximum load rating.

(d) It shall incorporate a tread wear indicator that will provide a visual indication that the tire has worn to a tread depth of 1.6 mm (1/16 inch).

(e) It shall, before being subjected to either the endurance test procedure specified in S5.4 or the high speed performance procedure specified in S5.5, exhibit no visual evidence of tread, sidewall, ply, cord, innerliner, or bead separation, chunking, broken cords, cracking, or open splices.

(f) It shall meet the requirements of S4.2.2.5 and S4.2.2.6 when tested on a test wheel described in S5.4.2.1 either alone or simultaneously with up to 5 other tires.

S4.2.2 *Test requirements.*

S4.2.2.1 *Test sample.* For each test sample use:

(a) One tire for physical dimensions, resistance to bead unseating, and strength, in sequence;

(b) Another tire for tire endurance; and

(c) A third tire for high speed performance.

S4.2.2.2 *Physical dimensions.* The actual section width and overall width for each tire measured in accordance with S5.1, shall not exceed the section width specified in a submission made by an individual manufacturer, pursuant to S4.4.1(a) or in one of the publications described in S4.4.1(b) for its size designation and type by more than:

(a) (For tires with a maximum permissible inflation pressure of 32, 36, or 40 psi) 7 percent, or

(b) (For tires with a maximum permissible inflation pressure of 240, 280, 290, 300, 330, 350 or 390 kPa, or 60 psi) 7 percent or 10 mm (0.4 inches), whichever is larger.

S4.2.2.3 *Tubeless tire resistance to bead unseating.*

S4.2.2.3.1 When a tubeless tire that has a maximum inflation pressure other than 420 kPa (60 psi) is tested in accordance with S5.2, the applied force required to unseat the tire bead at the point of contact shall be not less than:

(a) 6,670 N (1,500 pounds) for tires with a designated section width of less than 160 mm (6 inches);

(b) 8,890 N (2,000 pounds) for tires with a designated section width of 160 mm (6 inches) or more but less than 205 mm (8 inches);

(c) 11,120 N (2,500 pounds) for tires with a designated section width of 205 mm (8 inches) or more, using the section width specified in a submission made by an individual manufacturer, pursuant to S4.4.1(a), or in one of the publications described in S4.4.1(b) for the applicable tire size designation and type.

S4.2.2.3.2 When a tire that has a maximum inflation pressure of 420 kPa (60 psi) is tested in accordance with S5.2, the applied force required to unseat the bead at the point of contact shall be not less than:

(a) 6,670 N (1,500 pounds) for tires with a maximum load rating of less than 399 kg (880 pounds);

(b) 8,890 N (2,000 pounds) for tires with a maximum load rating of 399 kg (880 pounds) or more but less than 635 kg (1,400 pounds);

(c) 11,120 N (2,500 pounds) for tires with a maximum load rating of 635 kg (1,400 pounds) or more, using the maximum load rating marked on the sidewall of the tire.

S4.2.2.4 *Tire strength.* Each tire shall meet the requirements for minimum breaking energy specified in Table 1 when tested in accordance with S5.3.

S4.2.2.5 *Tire endurance.* When the tire has been subjected to the laboratory endurance test specified in S5.4, using a test rim that undergoes no permanent deformation and allows no loss of air through the portion that it comprises of the tire-rim pressure chamber:

(a) There shall be no visual evidence of tread, sidewall, ply, cord, innerliner, or bead separation, chunking, broken cords, cracking, or open splices.

(b) The tire pressure at the end of the test shall be not less than the initial pressures specified in S5.4.1.1.

S4.2.2.6 *High speed performance.* When the tire has been subjected to the laboratory high speed performance test specified in S5.5, using a test rim that undergoes no permanent deformation and allows no loss of air through the portion that it comprises of the tire-

rim pressure chamber, the tire shall meet the requirements set forth in S4.2.2.5 (a) and (b).

S4.3 Labeling Requirements. Except as provided in S4.3.1 and S4.3.2 of this standard, each tire, except for those certified to comply with S5.5 of §571.139, shall have permanently molded into or onto both sidewalls, in letters and numerals not less than 0.078 inches high, the information shown in paragraphs S4.3 (a) through (g) of this standard. On at least one sidewall, the information shall be positioned in an area between the maximum section width and bead of the tire, unless the maximum section width of the tire falls between the bead and one-fourth of the distance from the bead to the shoulder of the tire. For tires where the maximum section width falls in that area, locate all required labeling between the bead and a point one-half the distance from the bead to the shoulder of the tire. However, in no case shall the information be positioned on the tire so that it is obstructed by the flange or any rim designated for use with that tire in Standards Nos. 109 and 110 (Sec. 571.109 and Sec. 571.110 of this part).

(a) One size designation, except that equivalent inch and metric size designations may be used;

(b) Maximum permissible inflation pressure;

(c) Maximum load rating;

(d) The generic name of each cord material used in the plies (both sidewall and tread area) of the tire;

(e) Actual number of plies in the sidewall, and the actual number of plies in the tread area if different;

(f) The words ''tubeless'' or ''tube type'' as applicable; and

(g) The word ''radial'' if the tire is a radial ply tire.

S4.3.1 Each tire shall be labeled with the symbol DOT in the manner specified in part 574 of this chapter, which shall constitute a certification that the tire conforms to applicable Federal motor vehicle safety standards.

S4.3.2 Each tire shall be labeled with the name of the manufacturer, or brand name and number assigned to the manufacturer in the manner specified in part 574.

S4.3.3 [Reserved]

S4.3.4 If the maximum inflation pressure of a tire is 240, 280, 290, 300, 330, 340, 350, or 390 kPa, then:

(a) Each marking of that inflation pressure pursuant to S4.3(b) shall be followed in parenthesis by the equivalent inflation pressure in psi, rounded to the next higher whole number; and

(b) Each marking of the tire's maximum load rating pursuant to S4.3(c) in kilograms shall be followed in parenthesis by the equivalent load rating in pounds, rounded to the nearest whole number.

S4.3.5 If the maximum inflation pressure of a tire is 420 kPa (60 psi), the tire shall have permanently molded into or onto both sidewalls, in letters and numerals not less than 12.7 mm (½ inch), the words ''Inflate to 420 kPa (60 psi)''. On both sidewalls, the words shall be positioned in an area between the tire shoulder and the bead of the tire. However, in no case shall the words be positioned on the tire so that they are obstructed by the flange of any rim designated for use with that tire in this standard or in Standard No. 110 (§571.110 of this part).

S4.4 *Tire and rim matching information.*

S4.4.1 Each manufacturer of tires not certified to comply with S4 of §571.139 shall ensure that a listing of the rims that may be used with each tire that he produces is provided to the public. A listing compiled in accordance with paragraph (a) of S4.4.1 of this standard need not include dimensional specifications or diagram of a rim if the rim's dimensional specifications and diagram are contained in each listing published in accordance with paragraph (b) of S4.4.1 of this standard. The listing shall be in one of the following forms:

(a) Listed by manufacturer name or brand name in a document furnished to dealers of the manufacturer's tires, to any person upon request, and in duplicate to the Docket Section, National Highway Traffic Safety Administration, 400 Seventh Street SW., Washington, DC 20590; or

(b) Contained in publications, current at the date of manufacture of the tire or any later date, of at least one of the following organizations:

The Tire and Rim Association
The European Tyre and Rim Technical Organisation
Japan Automobile Tire Manufacturers' Association, Inc.
Deutsche Industrie Norm
British Standards Institution
Scandinavian Tire and Rim Organization
The Tyre and Rim Association of Australia

S4.4.2 Information contained in any publication specified in S4.4.1(b) of this standard which lists general categories of tires and rims by size designation, type of construction and/or intended use, shall be considered to be manufacturer's information pursuant to S4.4.1 of this standard for the listed tires and rims, unless the publication itself or specific information provided according to S4.4.1(a) of this standard indicates otherwise.

S5. *Test procedures.*

S5.1 *Physical Dimensions.* Determine tire physical dimensions under uniform ambient conditions as follows:

(a) Mount the tire on a test rim having the test rim width specified in a submission made by an individual manufacturer, pursuant to S4.4.1(a), or in one of the publications described in S4.4.1(b) for that tire size designation and inflate it to the applicable pressure specified in Table II.

(b) Condition it at ambient room temperature for at least 24 hours.

(c) Readjust pressure to that specified in (a).

(d) Caliper the section width and overall width at six points approximately equally spaced around the tire circumference.

(e) Record the average of these measurements as the section width and overall width, respectively.

(f) Determine tire outer diameter by measuring the maximum circumference of the tire and dividing this dimension by pi (3.14).

S5.2 *Tubeless tire bead unseating resistance.*

S5.2.1 *Preparation of tire-wheel assembly.*

S5.2.1.1 Wash the tire, dry it at the beads, and mount it without lubrication or adhesives on a clean, painted test rim.

S5.2.1.2 Inflate it to the applicable pressure specified in Table II at ambient room temperature.

S5.2.1.3 Mount the wheel and tire in a fixture shown in Figure 1, and force the bead unseating block shown in Figure 2 or Figure 2A against the tire sidewall as required by the geometry of the fixture. However, in testing a tire that has an inflation pressure of 60 psi, only use the bead unseating block described in Figure 2A.

S5.2.2 *Test procedure.*

S5.2.2.1 Apply a load through the block to the tire's outer sidewall at the distance specified in Figure 1 for the applicable wheel size at a rate of 50 mm (2 inches) per minute, with the load arm substantially parallel to the tire and rim assembly at the time of engagement.

S5.2.2.2 Increase the load until the bead unseats or the applicable value specified in S4.2.2.3 is reached.

S5.2.2.3 Repeat the test at least four places equally spaced around the tire circumference.

S5.3 *Tire strength.*

S5.3.1 *Preparation of tire.*

S5.3.1.1 Mount the tire on a test rim and inflate it to the applicable pressure specified in Table II.

S5.3.1.2 Condition it at room temperature for at least 3 hours; and

S5.3.1.3 Readjust its pressure to that specified in S5.3.1.1.

S5.3.2 *Test procedure.*

S5.3.2.1 Force a 19 mm (¾ inch) diameter cylindrical steel plunger with a hemispherical end perpendicularly into the tread rib as near to the centerline as possible, avoiding penetration into the tread groove, at the rate of 50 mm (2 inches) per minute.

S5.3.2.2 Record the force and penetration at five test points equally spaced around the circumference of the tire. If the tire fails to break before the plunger is stopped by reaching the rim, record the force and penetration as the rim is reached and use these values in S5.3.2.3.

S5.3.2.3 Compute the breaking energy for each test point by means of one of the two following formulas:

$W=[(F\times P)/2]\times 10^{\times 3}$ (joules)

Where

W=Energy, in joules;
F=Force, Newtons; and
P=Penetration, mm; or

$W=[(F\times P)/2]$

Where

W=Energy, inch-pounds;
F=Force, pounds; and
P=Penetration, inches.

S5.3.2.4 Determine the breaking energy value for the tire by computing the average of the five values obtained in accordance with S5.3.2.3.

S5.4 *Tire endurance.*

S5.4.1 *Preparation of tire.*

S5.4.1.1 Mount a new tire on a test rim and inflate it to the applicable pressure specified in Table II.

S5.4.1.2 Condition the tire assembly to 38° ±3 °C (100° ±5 °F) for at least three hours.

S5.4.1.3 Readjust tire pressure to that specified in S5.4.1.1 immediately before testing.

S5.4.2 *Test procedure.*

S5.4.2.1 Mount the tire and wheel assembly on a test axle and press it against a flat-faced steel test wheel 1708 mm (67.23 inches) in diameter and at least as wide as the section width of the tire to be tested or an approved equivalent test wheel, with the applicable test load specified in the table in S5.4.2.3 for the tire's size designation, type and maximum permissible inflation pressure.

S5.4.2.2 During the test, the air surrounding the test area shall be 38° ±3 °C (100° ±5 °F).

S5.4.2.3 Conduct the test at 80 kilometers per hour (km/h)(50 miles per hour) in accordance with the following schedule without pressure adjustment or other interruptions:

The loads for the following periods are the specified percentage of the maximum load rating marked on the tire sidewall:

	Percent
4 hours	85
6 hours	90
24 hours	100

S5.4.2.4 Immediately after running the tire the required time, measure its inflation pressure. Allow the tire to cool for one hour. Then deflate the tire, remove it from the test rim, and inspect it for the conditions specified in S4.2.2.5(a).

S5.5 High speed performance.

S5.5.1 After preparing the tire in accordance with S5.4.1, mount the tire and wheel assembly in accordance with S5.4.2.1, and press it against the test wheel with a load of 88 percent of the tire's maximum load rating as marked on the tire sidewall.

S5.5.2 Break in the tire by running it for 2 hours at 80 km/h (50 mph).

S5.5.3 Allow to cool to 38° ±3 °C (100° ±5 °F) and readjust the inflation pressure to the applicable pressure specified in Table II.

S5.5.4 Without readjusting inflation pressure, test at 121 km/h (75 mph) for 30 minutes, 129 km/h (80 mph) for 30 minutes, and 137 km/h (85 mph) for 30 minutes.

S5.5.5 Immediately after running the tire the required time, measure its inflation pressure. Allow the tire to cool for one hour. Then deflate the tire, remove it from the test rim, and inspect it for the conditions specified in S4.2.2.5(a).

S6. *Nonconforming tires.* No tire that is designed for use on passenger cars and manufactured on or after October 1, 1972, but does not conform to all the requirements of this standard, shall be sold, offered for sale, introduced or delivered for introduction into interstate commerce, or imported into the United States, for any purpose.

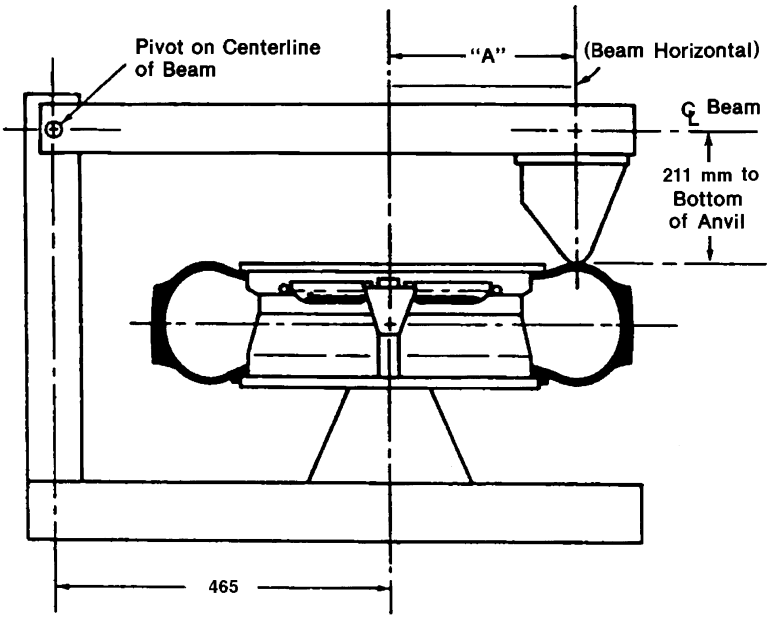

Figure 1.—Bead Unseating Fixture
All Dimensions in Millimeters (mm)

FIGURES FOR FMVSS NO. 109

Wheel size	Dimension "A" for tires with maximum inflation pressure			
	Other than 60 psi (in)	Other than 420 kPa	60 psi (in)	420 kPa
20	13.50	345		
19	13.00	330	12.00	305
18	12.50	318	11.40	290
17	12.00	305	10.60	269
16	11.50	292	9.90	251
15	11.00	279	9.40	239
14	10.50	267	8.90	226
13	10.00	254	8.40	213
12	9.50	241		
11	9.00	229		
10	8.50	216	.	
320	8.50	216		
340	9.00	229		
345	9.25	235		
365	9.75	248		
370	10.00	254		
390	11.00	279		
415	11.50	292		

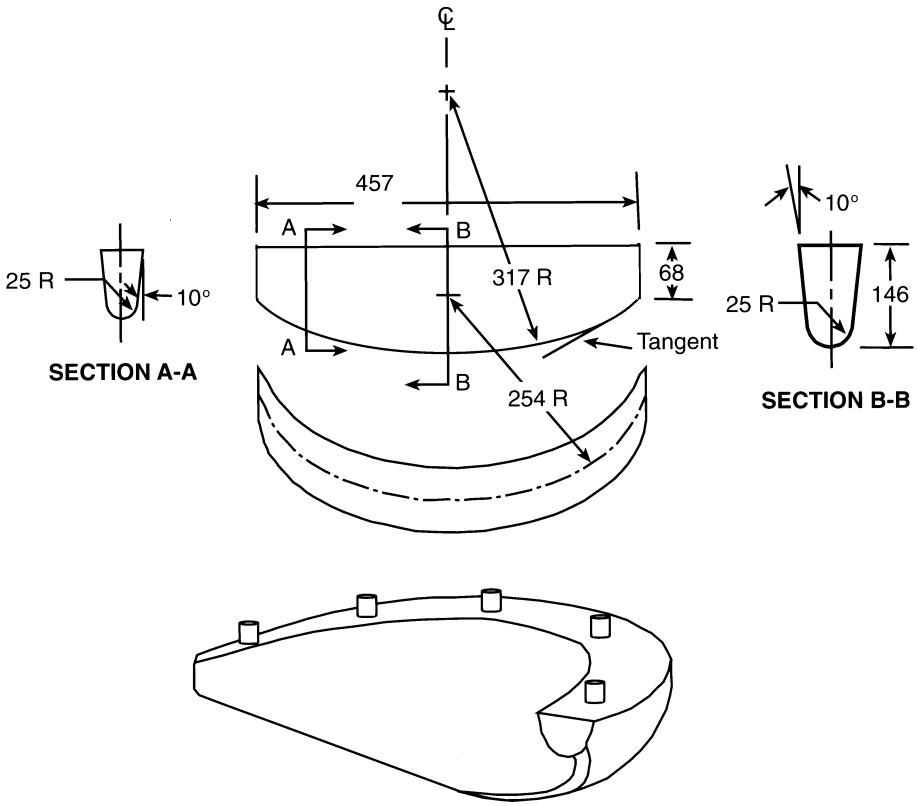

MATERIAL: Cast Aluminum 355
T-6 Condition
Finish-1.3 Micrometer (um)

Figure 2. DIAGRAM OF BEAD UNSEATING BLOCK
All dimensions in millimeters (mm)

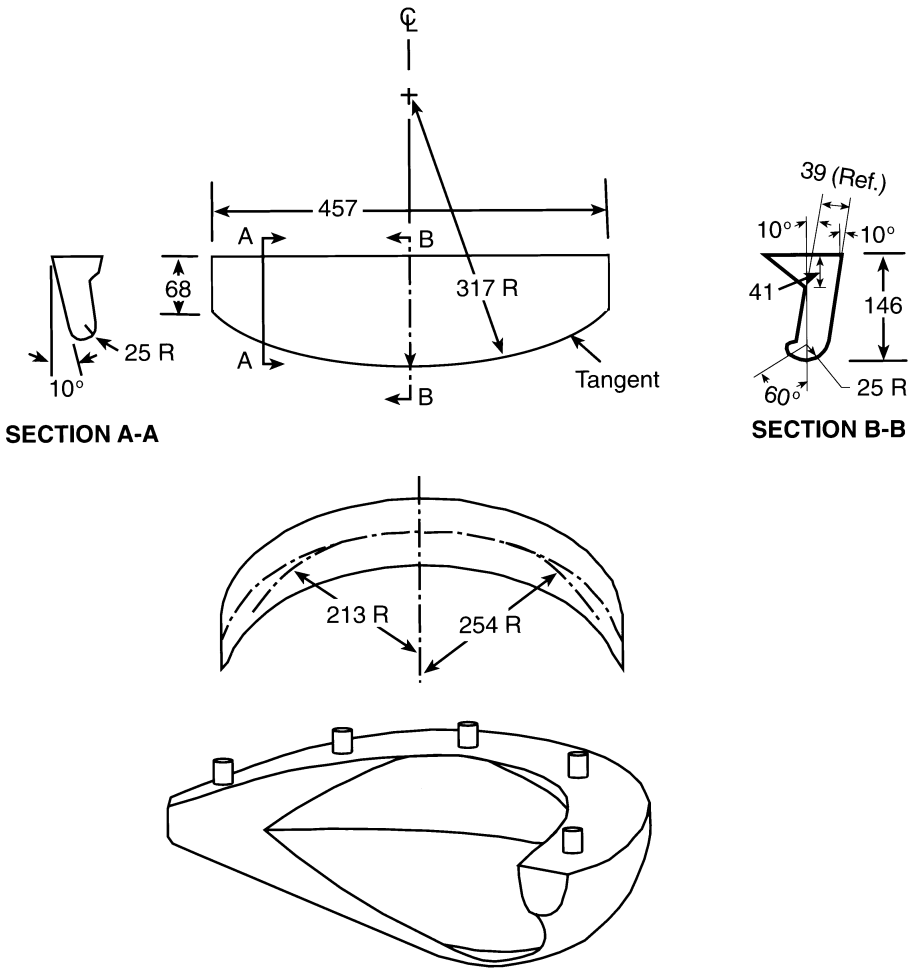

MATERIAL: Cast Aluminum 355
T-6 Condition
Finish-1.3 Micrometer (um)

Figure 2A. DIAGRAM OF BEAD UNSEATING BLOCK
All dimensions in millimeters (mm)

APPENDIX A—FEDERAL MOTOR VEHICLE SAFETY STANDARD NO. 109

The following tables list tire sizes and tire constructions with proper load and inflation values. The tables group tires of related constructions and load/inflation values. Persons requesting the addition of new tire sizes to the tables or the addition of tables for new tire constructions may, when the additions requested are compatible with existent groupings, or when adequate justification for new tables exists, submit five (5) copies of information and data supporting the request to

the Vehicle Dynamics Division, Office of Crash Avoidance Standards, National Highway Traffic Safety Administration, 400 Seventh Street SW., Washington, DC 20590.

The information should contain the following:

1. The tire size designation, and a statement either that the tire is an addition to a category of tires listed in the tables or that it is in a new category for which a table has not been deloped.

2. The tire dimensions, including aspect ratio, size factor, section width, overall width, and test rim size.

3. The load-inflation schedule of the tire.

4. A statement as to whether the tire size designation and load inflation schedule has been coordinated with the Tire and Rim Association, the European Tyre and Rim Technical Organisation, the Japan Automobile Tire Manufacturers' Association, Inc., the Deutsche Industrie Norm, the British Standards Institution, the Scandinavian Tire and Rim Organization, and the Tyre and Rim Association of Australia.

5. Copies of test data sheets showing test conditions, results and conclusions obtained for individual tests specified in §571.109.

6. Justification for the additional tire sizes.

TABLE I-A—FOR BIAS PLY TIRES WITH DESIGNATED SECTION WIDTH OF 152 MM (6 INCHES) AND ABOVE

Cord material	32 psi	36 psi	40 psi	240 kPa	280 kPa	300 kPa	340 kPa
Rayon:							
(in-lbs)	1,650	2,574	3,300	1,650	3,300	1,650	3,300
(joules)	186	291	373	186	373	186	373
Nylon or polyester:							
(in-lbs)	2,600	3,900	5,200	2,600	5,200	2,600	5,200
(joules)	294	441	588	294	588	294	588

TABLE I-B—FOR BIAS PLY TIRES WITH DESIGNATED SECTION WIDTH BELOW 152 MM (6 INCHES)

Cord material	32 psi	36 psi	40 psi	240 kPa	280 kPa	300 kPa	340 kPA
Rayon:							
(in-lbs)	1,000	1,875	2,500	1,000	2,500	1,000	2,500
(joules)	113	212	282	113	282	113	282
Nylon or polyester:							
(in-lbs)	1,950	2,925	3,900	1,950	3,900	1,950	3,900
(joules)	220	330	441	220	441	220	441

TABLE I-C—FOR RADIAL PLY TIRES

Size designation	Maximum permissible inflation											
	Tires other than CT tires								CT tires			
	psi			kPa					kPa			
	32	36	40	240	280	300	340	350	290	330	350	390
Below 160 mm:												
(in-lbs)	1,950	2,925	3,900	1,950	3,900	1,950	3,900	1,950	1,950	3,900	1,950	3,900
(joules)	220	330	441	220	441	220	441	220	220	441	220	441
160 mm or above:												
(in-lbs)	2,600	3,900	5,200	2,600	5,200	2,600	5,200	2,600	2,600	5,200	2,600	5,200
(joules)	294	441	588	294	588	294	588	294	294	588	294	588

TABLE I-D—FOR TIRES WITH 420 KPA (60 PSI) MAXIMUM PERMISSIBLE INFLATION PRESSURE AND MAXIMUM LOAD RATING 399 KG (880 LB) AND ABOVE

Cord material	Inch-pounds joules (J)
Rayon	1,650 inch pounds 186 joules (J).
Nylon or Polyester	2,600 inch pounds 294 joules (J).

TABLE I-E—FOR TIRES WITH 420 KPA (60 PSI) MAXIMUM PERMISSIBLE INFLATION PRESSURE AND MAXIMUM LOAD RATING BELOW 399 KG (880 LB)

Cord material	Inch-pounds joules (J)
Rayon	1,000 inch pounds 113 joules (J).

TABLE I-E—FOR TIRES WITH 420 KPA (60 PSI) MAXIMUM PERMISSIBLE INFLATION PRESSURE AND MAXIMUM LOAD RATING BELOW 399 KG (880 LB)—Continued

Cord material	Inch-pounds joules (J)
Nylon or Polyester	1,950 inch pounds 220 joules (J).

TABLE II—TEST INFLATION PRESSURES

[Maximum permissible inflation pressure to be used for the following test]

Test type	Tires other than CT tires									CT tires			
	psi				kPa					kPa			
	32	36	40	60	240	280	300	340	350	290	300	350	390
Physical dimensions, bead unseating, tire strength, and tire endurance	24	28	32	52	180	220	180	220	180	230	270	230	270
High speed performance	30	34	38	58	220	260	220	260	220	270	310	270	310

[38 FR 30235, Nov. 1, 1973]

EDITORIAL NOTE: For FEDERAL REGISTER citations affecting § 571.109, see the List of CFR Sections Affected, which appears in the Finding Aids section of the printed volume and on GPO Access.

§ 571.110 Tire selection and rims and motor home/recreation vehicle trailer load carrying capacity information for motor vehicles with a GVWR of 4,536 kilograms (10,000 pounds) or less.

S1. *Purpose and scope*. This standard specifies requirements for tire selection to prevent tire overloading and for motor home/recreation vehicle trailer load carrying capacity information.

S2. *Application*. This standard applies to motor vehicles with a gross vehicle weight rating (GVWR or 4,536 kilograms (10,000 pounds) or less, except for motorcycles, and to non-pneumatic spare tire assemblies for those vehicles.

S3. *Definitions*.

Accessory weight means the combined weight (in excess of those standard items which may be replaced) of automatic transmission, power steering, power brakes, power windows, power seats, radio, and heater, to the extent that these items are available as factory-installed equipment (whether installed or not).

Curb weight means the weight of a motor vehicle with standard equipment including the maximum capacity of fuel, oil, and coolant, and, if so equipped, air conditioning and additional weight optional engine.

Maximum loaded vehicle weight means the sum of—

(a) Curb weight;

(b) Accessory weight;

(c) Vehicle capacity weight; and

(d) Production options weight.

Light truck (LT) tire means a tire designated by its manufacturer as primarily intended for use on lightweight trucks or multipurpose passenger vehicles.

Non-pneumatic rim is used as defined in § 571.129.

Non-pneumatic spare tire assembly means a non-pneumatic tire assembly intended for temporary use in place of one of the pneumatic tires and rims that are fitted to a passenger car in compliance with the requirements of this standard.

Non-pneumatic tire and *non-pneumatic tire assembly* are used as defined in § 571.129.

Normal occupant weight means 68 kilograms times the number of occupants specified in the second column of Table I.

Occupant distribution means distribution of occupants in a vehicle as specified in the third column of Table I.

Passenger car tire means a tire intended for use on passenger cars, multipurpose passenger vehicles, and trucks, that have a gross vehicle

TABLE I-E—FOR TIRES WITH 420 KPA (60 PSI) MAXIMUM PERMISSIBLE INFLATION PRESSURE AND MAXIMUM LOAD RATING BELOW 399 KG (880 LB)—Continued

Cord material	Inch-pounds joules (J)
Nylon or Polyester	1,950 inch pounds 220 joules (J).

TABLE II—TEST INFLATION PRESSURES

[Maximum permissible inflation pressure to be used for the following test]

Test type	Tires other than CT tires									CT tires			
	psi				kPa					kPa			
	32	36	40	60	240	280	300	340	350	290	300	350	390
Physical dimensions, bead unseating, tire strength, and tire endurance	24	28	32	52	180	220	180	220	180	230	270	230	270
High speed performance	30	34	38	58	220	260	220	260	220	270	310	270	310

[38 FR 30235, Nov. 1, 1973]

EDITORIAL NOTE: For FEDERAL REGISTER citations affecting § 571.109, see the List of CFR Sections Affected, which appears in the Finding Aids section of the printed volume and on GPO Access.

§ 571.110 Tire selection and rims and motor home/recreation vehicle trailer load carrying capacity information for motor vehicles with a GVWR of 4,536 kilograms (10,000 pounds) or less.

S1. *Purpose and scope*. This standard specifies requirements for tire selection to prevent tire overloading and for motor home/recreation vehicle trailer load carrying capacity information.

S2. *Application*. This standard applies to motor vehicles with a gross vehicle weight rating (GVWR or 4,536 kilograms (10,000 pounds) or less, except for motorcycles, and to non-pneumatic spare tire assemblies for those vehicles.

S3. *Definitions*.

Accessory weight means the combined weight (in excess of those standard items which may be replaced) of automatic transmission, power steering, power brakes, power windows, power seats, radio, and heater, to the extent that these items are available as factory-installed equipment (whether installed or not).

Curb weight means the weight of a motor vehicle with standard equipment including the maximum capacity of fuel, oil, and coolant, and, if so equipped, air conditioning and additional weight optional engine.

Maximum loaded vehicle weight means the sum of—

(a) Curb weight;

(b) Accessory weight;

(c) Vehicle capacity weight; and

(d) Production options weight.

Light truck (LT) tire means a tire designated by its manufacturer as primarily intended for use on lightweight trucks or multipurpose passenger vehicles.

Non-pneumatic rim is used as defined in § 571.129.

Non-pneumatic spare tire assembly means a non-pneumatic tire assembly intended for temporary use in place of one of the pneumatic tires and rims that are fitted to a passenger car in compliance with the requirements of this standard.

Non-pneumatic tire and *non-pneumatic tire assembly* are used as defined in § 571.129.

Normal occupant weight means 68 kilograms times the number of occupants specified in the second column of Table I.

Occupant distribution means distribution of occupants in a vehicle as specified in the third column of Table I.

Passenger car tire means a tire intended for use on passenger cars, multipurpose passenger vehicles, and trucks, that have a gross vehicle

weight rating (GVWR) of 10,000 pounds or less.

Production options weight means the combined weight of those installed regular production options weighing over 2.3 kilograms in excess of those standard items which they replace, not previously considered in curb weight or accessory weight, including heavy duty brakes, ride levelers, roof rack, heavy duty battery, and special trim.

Rim is used as defined in §571.109.

Rim diameter means nominal diameter of the bead seat.

Rim size designation means rim diameter and width.

Rim type designation means the industry of manufacturer's designation for a rim by style or code.

Rim width means nominal distance between rim flanges.

Vehicle capacity weight means the rated cargo and luggage load plus 68 kilograms times the vehicle's designated seating capacity.

Vehicle maximum load on the tire means that load on an individual tire that is determined by distributing to each axle its share of the maximum loaded vehicle weight and dividing by two.

Vehicle normal load on the tire means that load on an individual tire that is determined by distributing to each axle its share of the curb weight, accessory weight, and normal occupant weight (distributed in accordance with Table I) and dividing by 2.

Wheel center member is used as defined in §571.129.

S4. *Requirements.*

S4.1 *General.* Vehicles shall be equipped with tires that meet the requirements of §571.139, New pneumatic tires for light vehicles, except that passenger cars may be equipped with a pneumatic T-type temporary spare tire assembly that meets the requirements of §571.109, or equipped with a non-pneumatic spare tire assembly that meets the requirements of §571.129, New non-pneumatic tires for passenger cars, and S6 and S8 of this standard. Passenger cars equipped with a non-pneumatic spare tire assembly shall meet the requirements of S4.3(e), and S5, and S7 of this standard.

S4.2 *Tire load limits.*

S4.2.1 Tire load limits for passenger cars.

S4.2.1.1 The vehicle maximum load on the tire shall not be greater than the applicable maximum load rating as marked on the sidewall of the tire.

S4.2.1.2 The vehicle normal load on the tire shall not be greater than 94 percent of the load rating at the vehicle manufacturer's recommended cold inflation pressure for that tire.

S4.2.2 Tire load limits for multipurpose passenger vehicles, trucks, buses, and trailers.

S4.2.2.1 Except as provided in S4.2.2.2, the sum of the maximum load ratings of the tires fitted to an axle shall not be less than the GAWR of the axle system as specified on the vehicle's certification label required by 49 CFR part 567. If the certification label shows more than one GAWR for the axle system, the sum shall be not less than the GAWR corresponding to the size designation of the tires fitted to the axle.

S4.2.2.2 When passenger car tires are installed on an MPV, truck, bus, or trailer, each tire's load rating is reduced by dividing it by 1.10 before determining, under S4.2.2.1, the sum of the maximum load ratings of the tires fitted to an axle.

S4.2.2.3 (a) For vehicles, except trailers with no designated seating positions, equipped with passenger car tires, the vehicle normal load on the tire shall be no greater than 94 percent of the derated load rating at the vehicle manufacturer's recommended cold inflation pressure for that tire.

(b) For vehicles, except trailers with no designated seating positions, equipped with LT tires, the vehicle normal load on the tire shall be no greater than 94 percent of the load rating at the vehicle manufacturer's recommended cold inflation pressure for that tire.

S4.3 *Placard.* Each vehicle, except for a trailer or incomplete vehicle, shall show the information specified in S4.3 (a) through (g), and may show, at the manufacturer's option, the information specified in S4.3 (h) and (i), on a placard permanently affixed to the driver's side B-pillar. In each vehicle without a driver's side B-pillar and with two doors on the driver's side of

the vehicle opening in opposite directions, the placard shall be affixed on the forward edge of the rear side door. If the above locations do not permit the affixing of a placard that is legible, visible and prominent, the placard shall be permanently affixed to the rear edge of the driver's side door. If this location does not permit the affixing of a placard that is legible, visible and prominent, the placard shall be affixed to the inward facing surface of the vehicle next to the driver's seating position. This information shall be in the English language and conform in color and format, not including the border surrounding the entire placard, as shown in the example set forth in Figure 1 in this standard. At the manufacturer's option, the information specified in S4.3 (c), (d), and, as appropriate, (h) and (i) may be shown, alternatively to being shown on the placard, on a tire inflation pressure label which must conform in color and format, not including the border surrounding the entire label, as shown in the example set forth in Figure 2 in this standard. The label shall be permanently affixed and proximate to the placard required by this paragraph. The information specified in S4.3 (e) shall be shown on both the vehicle placard and on the tire inflation pressure label (if such a label is affixed to provide the information specified in S4.3 (c), (d), and, as appropriate, (h) and (i)) may be shown in the format and color scheme set forth in Figures 1 and 2. If the vehicle is a motor home and is equipped with a propane supply, the weight of full propane tanks must be included in the vehicle's unloaded vehicle weight. If the vehicle is a motor home and is equipped with an on-board potable water supply, the weight of such on-board water must be treated as cargo.

(a) Vehicle capacity weight expressed as ''The combined weight of occupants and cargo should never exceed XXX kilograms or XXX pounds'';

(b) Designated seated capacity (expressed in terms of total number of occupants and number of occupants for each front and rear seat location);

(c) Vehicle manufacturer's recommended cold tire inflation pressure for front, rear and spare tires, subject to the limitations of S4.3.4. For full size spare tires, the statement ''see above'' may, at the manufacturer's option replace manufacturer's recommended cold tire inflation pressure. If no spare tire is provided, the word ''none'' must replace the manufacturer's recommended cold tire inflation pressure.

(d) Tire size designation, indicated by the headings ''size'' or ''original tire size'' or ''original size,'' and ''spare tire'' or ''spare,'' for the tires installed at the time of the first purchase for purposes other than resale. For full size spare tires, the statement ''see above'' may, at the manufacturer's option replace the tire size designation. If no spare tire is provided, the word ''none'' must replace the tire size designation;

(e) On the vehicle placard, ''Tire and Loading Information and, on the tire inflation pressure label, ''Tire Information'';

(f) ''See Owner's Manual for Additional Information'';

(g) For a vehicle equipped with a non-pneumatic spare tire assembly, the tire identification code with which that assembly is labeled pursuant to the requirements of S4.3(a) of 571.129, New Non-Pneumatic Tires for Passenger Cars;

(h) At the manufacturer's option, identifying information provided in any alphanumeric and or barcode form, located vertically, along the right edge or the left edge of the placard or the label, or horizontally, along the bottom edge of the placard or the label; and

(i) At the manufacturer's option, the load range identification symbol, load index, and speed rating, located immediately to the right of the tire size designation listed in accordance with S4.3(d) above.

S4.3.1 *Requirements for vehicles manufactured in two or more stages.* A placard or placard and label shall be affixed to the completed vehicle by the final-stage manufacturer in accordance with S4.3 and with the vehicle capacity weight and seating designations as finally manufactured.

S4.3.2 *Requirements for altered vehicles.* Except as provided in S10, a new

placard or placard and label shall be affixed, so as to obscure the original placard, to an altered vehicle that has previously been certified in accordance with §567.4 or §567.5, other than by the addition, substitution, or removal of readily attachable components such as mirrors or tire and rim assemblies, or minor finishing operations such as painting, or who alters the vehicle in such a manner that its stated weight ratings are no longer valid, before the first purchase of the vehicle in good faith for purposes other than resale, containing accurate information for the altered vehicle, in accordance with S4.3.

S4.3.3 *Additional labeling information for vehicles other than passenger cars.* Each vehicle shall show the size designation and, if applicable, the type designation of rims (not necessarily those on the vehicle) appropriate for the tire appropriate for use on that vehicle, including the tire installed as original equipment on the vehicle by the vehicle manufacturer, after each GAWR listed on the certification label required by §567.4 or §567.5 of this chapter. This information shall be in the English language, lettered in block capitals and numerals not less than 2.4 millimeters high and in the following format:

Truck Example—Suitable Tire-Rim Choice

GVWR: 2,441 kilograms (5381 pounds).

GAWR: Front—1,299 kilograms (2,864 pounds) with P265/70R16 tires, 16 × 8.0 rims at 248 kPa (36 psi) cold single.

GAWR: Rear—1,299 kilograms (2,864 pounds) with P265/70R16 tires, 16 × 8.00 rims, at 248 kPa (36 psi) cold single.

S4.3.4 No inflation pressure other than the maximum permissible inflation pressure may be shown on the placard and, if any, tire inflation pressure label unless—

(a) It is less than the maximum permissible inflation pressure;

(b) It is appropriate for the load limits as calculated in accordance with S4.2; and

(c) The tire load rating specified in a submission by an individual manufacturer, pursuant to S4.1.1(a) of §571.139 or contained in one of the publications described in S4.1.1(b) of §571.139, for the tire size at that inflation pressure is not less than the vehicle maximum load and the vehicle normal load on the tire for those vehicle loading conditions.

S4.3.5 *Requirements for trailers.* Each trailer, except for an incomplete vehicle, must show the information specified in S4.3 (c) through (g), and may show the information specified in S4.3 (h) and (i), on a placard permanently affixed proximate to the certification label specified in 49 CFR part 567. Additionally, each trailer must on its placard contain a cargo capacity statement expressed as ''The weight of cargo should never exceed XXX kilograms or XXX pounds'' in the same location on the placard specified for the ''vehicle capacity weight'' statement required by this standard. At the manufacturer's option, the information specified in S4.3 (c), (d), (h) and (i) may be shown, alternatively, on a tire inflation pressure label, and conform in color and format, not including the border surrounding the entire label, as specified in the example set forth in Figure 2 in this standard. The label shall be permanently affixed and proximate to the placard required by this paragraph. The information specified in S4.3 (e) shall be shown on both the vehicle placard and on the tire inflation pressure label (if such a label is affixed to provide the information specified in S4.3 (c), (d), (h) and (i)) in the format and color scheme set forth in Figures 1 and 2. If the vehicle is a recreation vehicle trailer and is equipped with a propane supply, the weight of full propane tanks must be included in the vehicle's unloaded vehicle weight. If the vehicle is a recreation vehicle trailer and is equipped with an on-board potable water supply, the weight of such on-board water must be treated as cargo.

S4.4 *Rims.*

S4.4.1 *Requirements.* Each rim shall:

(a) Be constructed to the dimensions of a rim that is listed by the manufacturer of the tires as suitable for use with those tires, in accordance with S4 of §571.139.

(b) In the event of rapid loss of inflation pressure with the vehicle traveling in a straight line at a speed of 97 kilometers per hour, retain the deflated

tire until the vehicle can be stopped with a controlled braking application.

TABLE I—OCCUPANT LOADING AND DISTRIBUTION FOR VEHICLE NORMAL LOAD FOR VARIOUS DESIGNATED SEATING CAPACITIES

Designated seating capacity, number of occupants	Vehicle normal load, number of occupants	Occupant distribution in a normally loaded vehicle
2 through 4	2	2 in front.
5 through 10	3	2 in front, 1 in second seat.
11 through 15	5	2 in front, 1 in second seat, 1 in third seat, 1 in fourth seat.
16 through 22	7	2 in front, 2 in second seat, 2 in third seat, 1 in fourth seat.

S4.4.2. *Rim markings for vehicles other than passenger cars.* Each rim or, at the option of the manufacturer in the case of a single-piece wheel, each wheel disc shall be marked with the information listed in S4.4.2 (a) through (e), in lettering not less than 3 millimeters in height, impressed to a depth or, at the option of the manufacturer, embossed to a height of not less than 0.125 millimeters. The information listed in S4.4.2 (a) through (c) shall appear on the outward side. In the case of rims of multi piece construction, the information listed in S4.4.2 (a) through (e) shall appear on the rim base and the information listed in S4.4.2 (b) and (d) shall also appear on each other part of the rim.

(a) A designation that indicates the source of the rim's published nominal dimensions, as follows:

(1) ''T'' indicates The Tire and Rim Association.

(2) ''E'' indicates The European Tyre and Rim Technical Organization.

(3) ''J'' indicates Japan Automobile Tire Manufacturers'' Association, Inc.

(4) ''L'' indicates ABPA (Brazil), a.k.a. Associacao Latino Americana De Pneus E Aros.

(5) ''F'' indicates Tire and Rim Engineering Data Committee of South Africa (Tredco).

(6) ''S'' indicates Scandinavian Tire and Rim Organization (STRO).

(7) ''A'' indicates The Tyre and Rim Association of Australia.

(8) ''I'' indicates Indian Tyre Technical Advisory Committee (ITTAC).

(9) ''R'' indicates Argentine Institute of Rationalization of Materials, a.k.a. Instituto Argentino de Racionalización de Materiales, (ARAM).

(10) ''N'' indicates an independent listing pursuant to S4.1 of § 571.139 or S5.1(a) of § 571.119.

(b) The rim size designation, and in case of multipiece rims, the rim type designation. For example: 20 x 5.50, or 20 x 5.5.

(c) The symbol DOT, constituting a certification by the manufacturer of the rim that the rim complies with all applicable Federal motor vehicle safety standards.

(d) A designation that identifies the manufacturer of the rim by name, trademark, or symbol.

(e) The month, day and year or the month and year of manufacture, expressed either numerically or by use of a symbol, at the option of the manufacturer. For example: ''September 4, 2001'' may be expressed numerically as: ''90401'', ''904, 01'' or ''01, 904''; ''September 2001'' may be expressed as: ''901'', ''9, 01'' or ''01, 9''.

(1) Any manufacturer that elects to express the date of manufacture by means of a symbol shall notify NHTSA in writing of the full names and addresses of all manufacturers and brand name owners utilizing that symbol and the name and address of the trademark owner of that symbol, if any. The notification shall describe in narrative form and in detail how the month, day, and year or the month and year are depicted by the symbol. Such description shall include an actual size graphic depiction of the symbol, showing and/or explaining the interrelationship of the component parts of the symbol as they will appear on the rim or single piece wheel disc, including dimensional specifications, and where the symbol will be located on the rim or single piece wheel disc. The notification shall be received by NHTSA not less than 60 calendar days before the first use of the symbol. The notification shall be mailed to the Office of Vehicle Safety Compliance (NVS–222), National Highway Traffic Safety Administration, 400 Seventh Street SW., Washington, DC 20590. All information provided to NHTSA under this paragraph will be placed in the public docket.

(2) Each manufacturer of wheels shall provide an explanation of its date of manufacture symbol to any person upon request.

S5. *Load Limits for Non-Pneumatic Spare Tires*. The highest vehicle maximum load on the tire for the vehicle shall not be greater than the load rating for the non-pneumatic spare tire.

S6 *Labeling Requirements for Non-Pneumatic Spare Tires or Tire Assemblies*. Each non-pneumatic tire or, in the case of a non-pneumatic tire assembly in which the non-pneumatic tire is an integral part of the assembly, each non-pneumatic tire assembly shall include, in letters or numerals not less than 4 millimeters high, the information specified in paragraphs S6 (a) and (b). The information shall be permanently molded, stamped, or otherwise permanently marked into or onto the non-pneumatic tire or non-pneumatic tire assembly, or shall appear on a label that is permanently attached to the tire or tire assembly. If a label is used, it shall be subsurface printed, made of material that is resistant to fade, heat, moisture and abrasion, and attached in such a manner that it cannot be removed without destroying or defacing the label on the non-pneumatic tire or tire assembly. The information specified in paragraphs S6 (a) and (b) shall appear on both sides of the non-pneumatic tire or tire assembly, except, in the case of a non-pneumatic tire assembly which has a particular side that must always face outward when mounted on a vehicle, in which case the information specified in paragraphs S6 (a) and (b) shall only be required on the outward facing side. The information shall be positioned on the tire or tire assembly such that it is not placed on the tread or the outermost edge of the tire and is not obstructed by any portion of any non-pneumatic rim or wheel center member designated for use with that tire in this standard or in Standard No. 129.

(a) FOR TEMPORARY USE ONLY; and

(b) MAXIMUM 80 KM/H (50 M.P.H.).

S7. *Requirements for Passenger Cars Equipped with Non-Pneumatic Spare Tire Assemblies*

S7.1 *Vehicle Placarding Requirements*. A placard, permanently affixed to the inside of the vehicle trunk or an equally accessible location adjacent to the non-pneumatic spare tire assembly, shall display the information set forth in S6 in block capitals and numerals not less than 6 millimeters high preceded by the words ''IMPORTANT—USE OF SPARE TIRE'' in letters not less than 9 millimeters high.

S7.2 *Supplementary Information*. The owner's manual of the passenger car shall contain, in writing in the English language and in not less than 10 point type, the following information under the heading ''IMPORTANT—USE OF SPARE TIRE'':

(a) A statement indicating the information related to appropriate use for the non-pneumatic spare tire including at a minimum the information set forth in S6 (a) and (b) and either the information set forth in S4.3(g) or a statement that the information set forth in S4.3(g) is located on the vehicle placard and on the non-pneumatic tire;

(b) An instruction to drive carefully when the non-pneumatic spare tire is in use, and to install the proper pneumatic tire and rim at the first reasonable opportunity; and

(c) A statement that operation of the passenger car is not recommended with more than one non-pneumatic spare tire in use at the same time.

S8. *Non-Pneumatic Rims and Wheel Center Members*

S8.1 *Non-Pneumatic Rim Requirements*. Each non-pneumatic rim that is part of a separable non-pneumatic spare tire assembly shall be constructed to the dimensions of a non-pneumatic rim that is listed pursuant to S4.4 of §571.129 for use with the non-pneumatic tire, designated by its non-pneumatic tire identification code, with which the vehicle is equipped.

S8.2 *Wheel Center Member Requirements*. Each wheel center member that is part of a separable non-pneumatic spare tire assembly shall be constructed to the dimensions of a wheel center member that is listed pursuant to S4.4 of §571.129 for use with the non-pneumatic tire, designated by its non-pneumatic tire identification code, with which the vehicle is equipped.

Vehicle Placard

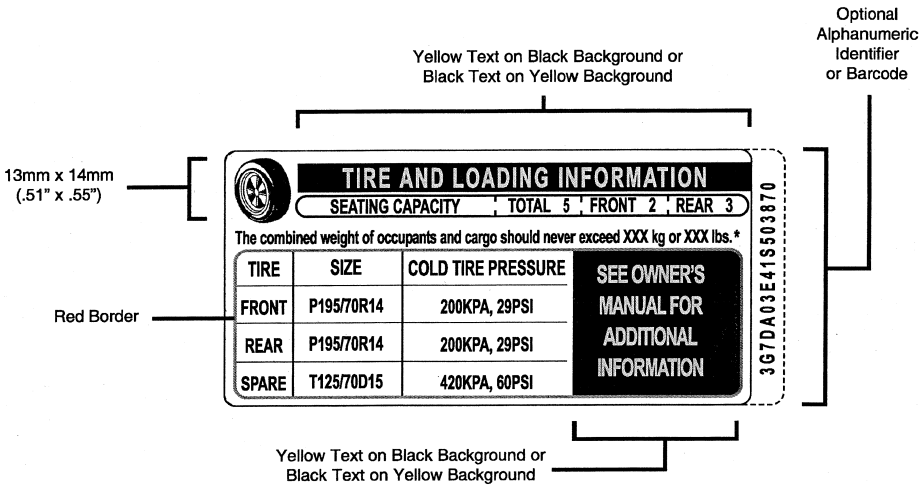

* For trailers, this statement should read:
The weight of cargo should not exceed XXX kg or XXX lbs.

Figure 1

Tire Inflation Pressure Label

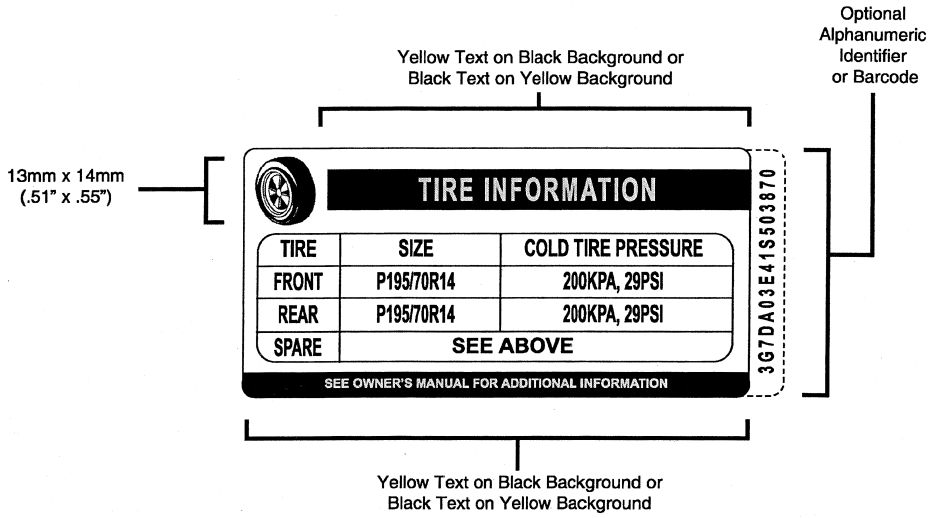

Figure 2

S9. Each motor home and recreation vehicle (RV) trailer must meet the applicable requirements in S9.

S9.1 On motor homes, the sum of the gross axle weight ratings (GAWR) of all axles on the vehicle must not be less than the gross vehicle weight rating (GVWR).

S9.2 On RV trailers, the sum of the GAWRs of all axles on the vehicle plus the vehicle manufacturer's recommended tongue weight must not be less than the GVWR. If tongue weight is specified as a range, the minimum value must be used.

S9.3 Each motor home and RV trailer single stage or final stage manufacturer must affix either a motor home occupant and cargo carrying capacity (OCCC) label (Figure 3) or a RV trailer cargo carrying capacity (CCC) label (Figure 4) to its vehicles that meets the following criteria:

S9.3.1 The RV load carrying capacity labels (Figures 3 and 4) and the RV supplemental labels (Figures 5 and 6) required by S9.3.3(b) must be legible, visible, moisture resistant, presented in the English language, have a minimum print size of 2.4 millimeters (3/32 inches) high and be printed in black print on a yellow background.

S9.3.2 The weight value for load carrying capacity on the RV load carrying capacity labels (Figures 3 and 4) must be displayed to the nearest kilogram with conversion to the nearest pound and must be such that the vehicle does not exceed its GVWR when loaded with the stated load carrying capacity. The UVW and the GVWR used to determine the RV's load carrying capacity must reflect the weights and design of the motor home or RV trailer as configured for delivery to the dealer/service facility. If applicable, the weight of full propane tanks must be included in the RV's UVW and the weight of on-board potable water must be treated as cargo.

S9.3.3 An RV load carrying capacity label (Figures 3 or 4) must be:

(a) Permanently affixed and must be visibly located on the interior of the forward-most exterior passenger door

on the right side of the vehicle or; at the option of the manufacturer,

(b) A temporary version of the RV load carrying capacity label (Figures 3 or 4) must be visibly located on the interior of the forward-most exterior passenger door on the right side of the vehicle. A permanent motor home or RV trailer supplemental label (Figures 5 or 6) must be permanently affixed within 25 millimeters of the placard specified in S4.3 for motor homes and S4.3.5 for RV trailers.

S9.3.4 Permanent and temporary motor home OCCC labels must contain the following information in accordance with Figure 3:

(a) The statement: ''MOTOR HOME OCCUPANT AND CARGO CARRYING CAPACITY'' in block letters.

(b) The Vehicle Identification Number (VIN).

(c) The statement ''THE COMBINED WEIGHT OF OCCUPANTS AND CARGO SHOULD NEVER EXCEED: XXX kg or XXX lbs'' in block letters with appropriate values included.

(d) The statement ''Safety belt equipped seating capacity: XXX'' with the appropriate value included. This is the total number of safety belt equipped seating positions.

(e) The statement ''CAUTION: A full load of water equals XXX kg or XXX lbs of cargo @ 1 kg/L (8.3 lb/gal) and the tongue weight of a towed trailer counts as cargo'' with appropriate values included.

S9.3.5 Permanent and temporary RV trailer CCC labels must contain the following information in accordance with Figure 4:

(a) The statement: ''RECREATION VEHICLE TRAILER CARGO CARRYING CAPACITY'' in block letters.

(b) The Vehicle Identification Number (VIN).

(c) The statement ''THE WEIGHT OF CARGO SHOULD NEVER EXCEED: XXX kg or XXX lbs'' in block letters with appropriate values included.

(d) The statement ''CAUTION: A full load of water equals XXX kg or XXX lbs of cargo @ 1 kg/L (8.3 lb/gal)'' with appropriate values included.

S9.3.6 For RVs, the vehicle capacity weight values and the seating capacity values (motor homes only) on the placard required by S4.3 or S4.3.5 must agree with the load carrying capacity weight values and the safety belt equipped seating capacity (motor homes only) on the RV load carrying capacity labels (Figures 3 and 4).

S9.3.7 The permanent motor home supplemental label must contain the following information in accordance with Figure 5:

(a) The statement ''CAUTION: A full load of water equals XXX kg or XXX lbs of cargo @ 1 kg/L (8.3 lb/gal) and the tongue weight of a towed trailer counts as cargo'' with appropriate values included.

S9.3.8 The permanent RV trailer supplemental label must contain the following information in accordance with Figure 6:

(a) The statement ''CAUTION: A full load of water equals XXX kg or XXX lbs of cargo @ 1 kg/L (8.3 lb/gal)'' with appropriate values included.

S10. *Weight added to vehicles between final vehicle certification and first retail sale of the vehicle.*

S10.1 If weight exceeding the lesser of 1.5 percent of GVWR or 45.4 kg (100 pounds) is added to a vehicle between final vehicle certification and first retail sale of the vehicle, the vehicle capacity weight values on the placard required by S4.3 or S4.3.5 and the load carrying capacity weight values on the RV load carrying capacity labels (Figures 3 and 4) required by S9.3 must be corrected using one or a combination of the following methods:

(a) Permanently affix load carrying capacity modification labels (Figure 7), which display the amount the load carrying capacity is reduced to the nearest kilogram with conversion to the nearest pound, within 25 millimeters of the original, permanent RV load carrying capacity label (Figure 3 or 4) and the original placard (Figure 1). The load carrying capacity modification labels must be legible, visible, permanent, moisture resistant, presented in the English language, have a minimum print size of 2.4 millimeters (3/32 inches) high and be printed in black print on a yellow background, or

(b) If the manufacturer selects S9.3.3(b), apply a temporary version of the load carrying capacity modification label (Figure 7) within 25 millimeters of the original, temporary RV load

carrying capacity label (Figure 3 or 4) on the interior of the forward-most exterior passenger door on the right side of the vehicle, in addition to applying a permanent version of the same label within 25 mm of the placard required by S4.3 or S4.3.5. Both temporary and permanent versions of the load carrying capacity modification label (Figure 7) may be printed without values and values may be legibly applied to the label with a black, fine point, indelible marker. The label must contain the statements ''CAUTION—LOAD CARRYING CAPACITY REDUCED'' in block letters and ''Modifications to this vehicle have reduced the original load carrying capacity by XXX kg or XXX lbs'' in accordance with Figure 7. If two load carrying capacity modification labels are required (one permanent and one temporary), the weight values on each must agree, or

(c) Modify the original, permanent RV load carrying capacity labels (Figures 3 and 4) and the placard (Figure 1) with correct vehicle capacity weight values. If the manufacturer selects S9.3.3(b), the temporary RV load carrying capacity labels (Figures 3 and 4) must also be modified with correct vehicle capacity weight values. Modification of labels requires a machine printed overlay with printed corrected values or blanks for corrected values that may be entered with a black, fine-point, indelible marker. Crossing out old values and entering corrected values on the original label is not permissible, or

(d) Replace the original, permanent RV load carrying capacity labels (Figures 3 and 4) and the placard (Figure 1) with the same labels/placard containing correct vehicle capacity weight values. If the manufacturer selects S9.3.3(b), the temporary RV load carrying capacity labels (Figures 3 and 4) must also be replaced with the same labels containing correct vehicle capacity weight values.

S10.2 Corrected load carrying capacity weight values or the weight amount the load carrying capacity is reduced, must reflect the total weight added between final vehicle certification and first retail sale and must be accurate within one percent of the actual added weight. No action is required if the weight of the vehicle is reduced between final vehicle certification and first retail sale.

MOTOR HOME OCCUPANT AND CARGO CARRYING CAPACITY
VIN: ##################
THE COMBINED WEIGHT OF OCCUPANTS AND CARGO SHOULD NEVER EXCEED:
XXX kg or XXX lbs
Safety belt equipped seating capacity: XXX
CAUTION:
A full load of water equals XXX kg or XXX lbs of cargo @ 1 kg/L (8.3 lb/gal) and the tongue weight of a towed trailer counts as cargo

Figure 3 - Motor Home Occupant and Cargo Carrying Capacity Label

RECREATION VEHICLE TRAILER CARGO CARRYING CAPACITY
VIN: ##################
THE WEIGHT OF CARGO SHOULD NEVER EXCEED:
XXX kg or XXX lbs
CAUTION:
A full load of water equals XXX kg or XXX lbs of cargo @ 1 kg/L (8.3 lb/gal)

Figure 4 - RV Trailer Cargo Carrying Capacity Label

CAUTION:
A full load of water equals XXX kg or XXX lbs of cargo @ 1 kg/L (8.3 lb/gal) and the tongue weight of a towed trailer counts as cargo

Figure 5 - Motor Home Supplemental Label

CAUTION:
A full load of water equals XXX kg or XXX lbs of cargo @ 1 kg/L (8.3 lb/gal)

Figure 6 - RV Trailer Supplemental Label

CAUTION: LOAD CARRYING CAPACITY REDUCED
Modifications to this vehicle have reduced the original load carrying capacity by _____kg or _____lbs

Figure 7 - Load Carrying Capacity Modification Label

[36 FR 22902, Dec. 2, 1971, as amended at 37 FR 23727, Nov. 8, 1972; 40 FR 5530, Feb. 6, 1975; 47 FR 36183, Aug. 19, 1982; 49 FR 38612, Oct. 1, 1984; 55 FR 29589, July 20, 1990; 56 FR 19311, Apr. 26, 1991; 60 FR 13643, Mar. 14, 1995; 67 FR 69623, Nov. 18, 2002; 68 FR 38147, June 26, 2003; 68 FR 37982, June 26, 2003; 69 FR 31317, June 3, 2004; 70 FR 14424, Mar. 22, 2005; 71 FR 885, Jan. 6, 2006; 72 FR 49210, Aug. 28, 2007; 72 FR 68461, 68462, Dec. 4, 2007]

[56 FR 15294, Apr. 16, 1991, as amended at 57 FR 23963, June 5, 1992; 57 FR 28012, June 23, 1992; 58 FR 16785, Mar. 31, 1993; 60 FR 13644, Mar. 14, 1995; 69 FR 55531, 55544, Sept. 15, 2004; 71 FR 18683, Apr. 12, 2006; 71 FR 25285, Apr. 28, 2006; 73 FR 38339, July 7, 2008]

§571.119 Standard No. 119; New pneumatic tires for motor vehicles with a GVWR of more than 4,536 kilograms (10,000 pounds) and motorcycles.

S1. Scope. This standard establishes performance and marking requirements for tires for use on motor vehicles with a GVWR of more than 10,000 pounds and motorcycles.

S2. Purpose. The purpose of this standard is to provide safe operational performance levels for tires used on motor vehicles with a GVWR of more than 10,000 pounds, trailers, and motorcycles, and to place sufficient information on the tires to permit their proper selection and use.

S3. *Application.* This standard applies to:

(a) New pneumatic tires for use on motor vehicles with a GVWR of more than 4,536 kilograms (10,000 pounds) manufactured after 1948;

(b) New pneumatic light truck tires with a tread depth of 18/32 inch or greater, for use on motor vehicles with a GVWR of 4,536 kilograms (10,000 pounds) or less manufactured after 1948;

(c) Tires for use on special-use trailers (ST, FI and 8–12 rim or lower diameter code); and

(d) Tires for use on motorcycles manufactured after 1948.

S4. *Definitions.* All terms defined in the Act and the rules and standards issued under its authority are used as defined therein.

Light truck tire means a tire designated by its manuafacturer as primarily intended for use on lightweight trucks or multipurpose passenger vehicles.

Model rim assembly means a test device that (a) includes a rim which conforms to the published dimensions of a commercially available rim, (b) includes an air valve assembly when used for testing tubeless tires or an innertube and flap (as required) when used for testing tubetype tires, and (c) undergoes no permanent rim deformation and allows no loss of air through the portion that it comprises of the tire-rim pressure chamber when a tire is properly mounted on the assembly and subjected to the requirements of this standard.

S5. *Tire and rim matching information.*

S5.1 Each manufacturer of tires shall ensure that a listing of the rims that may be used with each tire that he produces is provided to the public. For purposes of this section each rim listing shall include dimensional specifications and a diagram of the rim. However a listing compiled in accordance with paragraph (a) of this section need not include dimensional specifications or a diagram of a rim if the rim's dimensional specifications and diagram are contained in each listing published in accordance with paragraph (b) of this standard. The listing shall be in one of the following forms:

(a) Listed by manufacturer name or brand name in a document furnished to dealers of the manufacturer's tires, to any person upon request, and in duplicate to: Docket Section, National Highway Traffic Safety Administration, 400 Seventh Street SW., Washington, DC 20590; or

(b) Contained in publications, current at the date of manufacture of the tire or any later date, of at least one of the following organizations:

The Tire and Rim Association
The European Tyre and Rim Technical Organisation
Japan Automobile Tire Manufacturers' Association, Inc.
Deutsche Industrie Norm
British Standards Institution
Scandinavian Tire and Rim Organization
The Tyre and Rim Association of Australia

S5.2 Information contained in a publication specified in S5.1(b) which lists general categories of tires and rims by size designation, type of construction, and/or intended use, shall be considered to be manufacturer's information pursuant to S5.1 for the listed tires, unless the publication itself or specific information provided according to S5.1(a) indicates otherwise.

S6. *Requirements.* Each tire shall be capable of meeting any of the applicable requirements set forth below, when mounted on a model rim assembly corresponding to any rim designated by

the tire manufacturer for use with the tire in accordance with S5. However, a particular tire need not meet further requirements after having been subjected to and met the endurance test (S6.1), strength test (S6.2), or high speed performance test (S6.3).

S6.1 *Endurance.*

S6.1.1 Prior to testing in accordance with the procedures of S7.2, a tire shall exhibit no visual evidence of tread, sidewall, ply, cord, innerliner, or bead separation, chunking, broken cords, cracking, or open splices.

S6.1.2 When tested in accordance with the procedures of S7.2:

(a) There shall be no visual evidence of tread, sidewall, ply, cord, innerliner, or bead separation, chunking, broken cords, cracking, or open splices.

(b) The tire pressure at the end of the test shall be not less than the initial pressure specified in S7.2(a).

S6.2 *Strength.* When tested in accordance with the procedures of S7.3 a tire's average breaking energy value shall be not less than the value specified in Table II for that tire's size and load range.

S6.3 *High speed performance.* When tested in accordance with the procedures of S7.3, a tire shall meet the requirements set forth in S6.1.1 and S6.1.2(a) and (b). However, this requirement applies only to motorcycle tires and to non-speed-restricted tires of nominal rim diameter code 14.5 or less marked load range A, B, C, or D.

S6.4 *Treadwear indicators.* Except as specified in this paragraph, each tire shall have at least six treadwear indicators spaced approximately equally around the circumference of the tire that enable a person inspecting the tire to determine visually whether the tire has worn to a tread depth of 1.6 mm (one-sixteenth of an inch). Tires with a rim diameter code of 12 or smaller shall have at least three such treadwear indicators. Motorcycle tires shall have at least three such indicators which permit visual determination that the tire has worn to a tread depth of 0.8 mm (one-thirty-second of an inch).

S6.5 *Tire markings.* Except as specified in this paragraph, each tire shall be marked on each sidewall with the information specified in paragraphs (a) through (j) of this section. The markings shall be placed between the maximum section width (exclusive of sidewall decorations or curb ribs) and the bead on at least one sidewall, unless the maximum section width of the tire is located in an area which is not more than one-fourth of the distance from the bead to the shoulder of the tire. If the maximum section width falls within that area, the markings shall appear between the bead and a point one-half the distance from the bead to the shoulder of the tire, on at least one sidewall. The markings shall be in letters and numerals not less than 2 mm (0.078 inch) high and raised above or sunk below the tire surface not less that 0.4 mm (0.015 inch), except that the marking depth shall be not less than 0.25mm (0.010 inch) in the case of motorcycle tires. The tire identification and the DOT symbol labeling shall comply with part 574 of this chapter. Markings may appear on only one sidewall and the entire sidewall area may be used in the case of motorcycle tires and recreational, boat, baggage, and special trailer tires.

(a) The symbol DOT, which shall constitute a certification that the tire conforms to applicable Federal motor vehicle safety standards. This symbol may be marked on only one sidewall.

(b) The tire identification number required by part 574 of this chapter. This number may be marked on only one sidewall.

(c) The tire size designation as listed in the documents and publications designated in S5.1.

(d) The maximum load rating and corresponding inflation pressure of the tire, shown as follows:

(Mark on tires rated for single and dual load): Max load single ____kg (____lb) at ____kPa (____psi) cold. Max load dual ____kg (____lb) at ____kPa (____psi) cold.

(Mark on tires rated only for single load): Max load ____kg (____lb) at ____kPa (____psi) cold.

(e) The speed restriction of the tire, if 90 km/h (55 mph) or less, shown as follows:

Max speed ____km/h (____mph).

(f) The actual number of plies and the composition of the ply cord material in the sidewall and, if different, in the tread area;

(g) The words ''tubeless'' or ''tube type'' as applicable.

(h) The word ''regroovable'' if the tire is designed for regrooving.

(i) The word ''radial'' if a radial tire.

(j) The letter designating the tire load range.

S6.6 *Maximum load rating.* If the maximum load rating for a particular tire size is shown in one or more of the publications described in S5.1(b), each tire of that size designation shall have a maximum load rating that is not less than the published maximum load rating, or if there are differing published ratings for the same tire size designation, not less than the lowest published maximum load rating for the size designation.

S7. *Test procedures.*

S7.1 *General conditions.*

S7.1.1 The tests are performed using an appropriate new tube, tube valve and flap assembly (as required) that allows no loss of air for testing of tube-type tires under S7.2, S7.3, and S7.4, and tubeless tires under S7.3.

S7.1.2 The tire must be capable of meeting the requirements of S7.2 and S7.4 when conditioned to a temperature of 35 °C (95 °F) for 3 hours before the test is conducted, and with an ambient temperature maintained at 35 °C (95 °F) during all phases of testing. The tire must be capable of meeting the requirements of S7.3 when conditioned at a temperature of 21 °C (70 °F) for 3 hours before the test is conducted.

S7.2 *Endurance.* (a) Mount the tire on a model rim assembly and inflate it to the inflation pressure corresponding to the maximum load rating marked on the tire. Use a single maximum load value when the tire is marked with both single and dual maximum load.

(b) After conditioning the tire-rim assembly in accordance with S7.1.2, adjust the tire pressure to that specified in (a) immediately before mounting the tire rim assembly.

(c) Mount the tire-rim assembly on an axle and press it against a flat-faced steel test wheel that is 1708 mm (67.23 inches) in diameter and at least as wide as the tread of the tire.

(d) Apply the test load and rotate the test wheel as indicated in Table III for the type of tire tested conducting each successive phase of the test without interruption.

(e) Immediately after running the tire the required time, measure the tire inflation pressure. Remove the tire from the model rim assembly, and inspect the tire.

S7.3 *Strength.* (a) Mount the tire on a model rim assembly and inflate it to the pressure corresponding to the maximum load, or maximum dual load where there is both a single and dual load marked on the tire. If the tire is tubeless, a tube may be inserted to prevent loss of air during the test in the event of puncture.

(b) After conditioning the tire-rim assembly in accordance with S7.1.2, adjust the tire pressure to that specified in (a).

(c) Force a cylindrical steel plunger, with a hemispherical end and of the diameter specified in Table I for the tire size, perpendicularly into a raised tread element as near as possible to the centerline of the tread, at a rate of 50 mm (2 inches) per minute, until the tire breaks or the plunger is stopped by the rim.

(d) Record the force and the distance of penetration just before the tire breaks, or if it fails to break, just before the plunger is stopped by the rim.

(e) Repeat the plunger application at 72° intervals around the circumference of the tire, until five measurements are made. However, in the case of tires of 12 inch rim diameter code or smaller, repeat the plunger application at 120° intervals around the circumference of the tire, until three measurements are made.

(f) Compute the breaking energy for each test point by one of the two following formulas:

(1) $W = [(F \times P)/2] \times 10^{-3}$ (joules)

Where:

W = Breaking energy (in joules) (kJ)
F = Force in newtons (N) and
P = Penetration in millimeters (mm), or;

(2) $W = (FP/2)$

Where:

W = Breaking energy in inch-pounds,
F = Force in pounds,
P = Penetration in inches.

(g) Determine the average breaking energy value for the tire by computing

the average of the values obtained in accordance with paragraph (f).

S7.4 *High speed performance.* (a) Perform steps (a) through (c) of S7.2.

(b) Apply a force of 88 percent of the maximum load rating marked on the tire (use single maximum load value when the tire is marked with both single and dual maximum loads), and rotate the test wheel at 250 rpm for 2 hours.

(c) Remove the load, allow the tire to cool to 35 °C (95 °F), and then adjust the pressure to that marked on the tire for single tire use.

(d) Reapply the same load, and without interruption or readjustment of inflation pressure, rotate the test wheel at 375 rpm for 30 minutes, then at 400 rpm for 30 minutes, and then at 425 rpm for 30 minutes.

(e) Immediately after running the tire the required time, measure the tire inflation pressure. Remove the tire from the model rim assembly, and inspect the tire.

TABLE I—STRENGTH TEST PLUNGER DIAMETER

Tire type	Plunger diameter	
	(mm)	(inches)
Light truck	19.05	3/4
Motorcycle	7.94	5/16
≤ 12 rim diameter code (except motorcycle)	19.05	3/4
Tubeless:		
≤ 17.5 rim diameter code	19.05	3/4
>17.5 rim diameter code, load range F or less	31.75	1 1/4
> 17.5 rim diameter code, load range over F	38.10	1 1/2
Tube-type:		
Load range F or less	31.75	1 1/4
Load range over F	38.10	1 1/2

TABLE II—MINIMUM STATIC BREAKING ENERGY

[Joules (J) and Inch-Pounds (inch-lbs)]

Tire characteristic	Motorcycle		All 12 rim diameter code or smaller except motorcycle		Light truck and 17.5 rim diameter code or smaller Tubeless		Tires other than Light Truck, Motorcycle, 12 rim diameter code or smaller							
Plunger diameter (mm and inches)	7.94 mm	5/16″					Tube type		Tubeless greater than 17.5 rim diameter code		Tube type		Tubeless greater than 17.5 rim diameter code	
Breaking Energy	J	In-lbs	19.05 mm	3/4″	19.05 mm	3/4″	31.75 mm	1 1/4″	31.75 mm	1 1/4″	38.10 mm	1 1/2″	38.10 mm	1 1/2″
			J	In-lbs	J	In-lbs	J	In-lbs	J	In-lbs	J	In-lbs	J	In-lbs
Load Range:														
A	16	150	67	600	225	2,000								
B	33	300	135	1,200	293	2,600								
C	45	400	203	1,800	361	3,200	768	6,800	576	5,100				
D	.....	.....	271	2,400	514	4,550	892	7,900	734	6,500				
E	.....	.....	338	3,000	576	5,100	1,412	12,500	971	8,600				
F	.....	.....	406	3,600	644	5,700	1,785	15,800	1,412	12,500				
G	.....	.....	.....	.....	711	6,300	2,282	20,200	1,694	15,000				
H	.....	.....	.....	.....	768	6,800	2,598	23,000	2,090	18,500				
J	.....	.....	.....	.....	.....	.....	.....	.....	.....	2,824	25,000	2,203	19,500	
L	.....	.....	.....	.....	.....	.....	.....	.....	.....	3,050	27,000			
M	.....	.....	.....	.....	.....	.....	.....	.....	.....	3,220	28,500			
N	.....	.....	.....	.....	.....	.....	.....	.....	.....	3,389	30,000			

TABLE III—ENDURANCE TEST SCHEDULE

Description	Load range	Test wheel speed		Test load: Percent of maximum load rating			Total test revolutions (thousands)
		km/h	r/m	I–7 hours	II–16 hours	III–24 hours	
Speed restricted service:							
90 km/h (55 mph)	F, G, H, J, L, M, N.	40	125	66	84	101	352.0
80 km/h (50 mph)	F, G, H, J, L	32	100	66	84	101	282.5
56 km/h (35 mph)	All	24	75	66	84	101	211.0
Motorcycle	All	80	250	[1] 100	[2] 108	117	510.0
All other	F	64	200	66	84	101	564.0
	G	56	175	66	84	101	493.5
	H, J, L, N	48	150	66	84	101	423.5

(Secs. 113, 201, 80 Stat. 718 (15 U.S.C. 1402, 1421); secs. 103, 112, 119, 201, 203, Pub. L. 89–563, 80 Stat. 718 (15 U.S.C. 1392, 1401, 1421, 1423); delegation of authority at 49 CFR 1.50)

[38 FR 31301, Nov. 13, 1973, as amended at 39 FR 4087, Feb. 1, 1974; 39 FR 5192, Feb. 11, 1974; 39 FR 12105, Apr. 3, 1974; 39 FR 19481, June 3, 1974; 40 FR 5530, Feb. 6, 1975; 43 FR 30542, July 17, 1978; 43 FR 50441, Oct. 30, 1978; 48 FR 25209, June 6, 1983; 50 FR 10773, Mar. 18, 1985; 54 FR 38386, Sept. 18, 1989; 61 FR 29494, June 11, 1996; 63 FR 28921, May 27, 1998; 68 FR 38148, June 26, 2003; 70 FR 300, Jan. 4, 2005; 71 FR 885, Jan. 6, 2006; 72 FR 49210, Aug. 28, 2007]

§ 571.120 Tire selection and rims and motor home/recreation vehicle trailer load carrying capacity information for motor vehicles with a GVWR of more than 4,536 kilograms (10,000 pounds).

S1. *Scope*. This standard specifies tire and rim selection requirements, rim marking requirements and motor home/recreation vehicle trailer load carrying capacity information.

S2. *Purpose*. The purpose of this standard is to provide safe operational performance by ensuring that vehicles to which it applies are equipped with tires of adequate size and load rating and with rims of appropriate size and type designation, and by ensuring that consumers are informed of motor home/recreation vehicle trailer load carrying capacity.

S3. *Application*. This standard applies to motor vehicles with a gross vehicle weight rating (GVWR) of more than 4,536 kilograms (10,000 pounds and motorcycles, to rims for use on those vehicles, and to non-pneumatic spare tire assemblies for use on those vehicles.

S4. *Definitions*. All terms defined in the Act and the rules and standards issued under its authority are used as defined therein.

Rim base means the portion of a rim remaining after removal of all split or continuous rim flanges, side rings, and locking rings that can be detached from the rim.

Rim size designation means rim diameter and width.

Rim diameter means nominal diameter of the bead seat.

Rim width means nominal distance between rim flanges.

Rim type designation means the industry or manufacturer's designation for a rim by style or code.

Weather side means the surface area of the rim not covered by the inflated tire.

S5. *Requirements*.

S5.1 *Tire and rim selection*.

S5.1.1 Except as specified in S5.1.3, each vehicle equipped with pneumatic tires for highway service shall be equipped with tires that meet the requirements of § 571.109, § 571.119 or § 571.139, and rims that are listed by the manufacturer of the tires as suitable for use with those tires, in accordance with S4.4 of § 571.109 or S5.1 of § 571.119, as applicable, except that vehicles may be equipped with a non-pneumatic spare tire assembly that meets the requirements of § 571.129, New non-pneumatic tires for passenger cars, and S8 of this standard. Vehicles equipped with such an assembly shall meet the requirements of S5.3.3, S7, and S9 of this standard.

TABLE III—ENDURANCE TEST SCHEDULE

Description	Load range	Test wheel speed		Test load: Percent of maximum load rating			Total test revolutions (thousands)
		km/h	r/m	I–7 hours	II–16 hours	III–24 hours	
Speed restricted service:							
90 km/h (55 mph)	F, G, H, J, L, M, N.	40	125	66	84	101	352.0
80 km/h (50 mph)	F, G, H, J, L	32	100	66	84	101	282.5
56 km/h (35 mph)	All	24	75	66	84	101	211.0
Motorcycle	All	80	250	[1] 100	[2] 108	117	510.0
All other	F	64	200	66	84	101	564.0
	G	56	175	66	84	101	493.5
	H, J, L, N	48	150	66	84	101	423.5

(Secs. 113, 201, 80 Stat. 718 (15 U.S.C. 1402, 1421); secs. 103, 112, 119, 201, 203, Pub. L. 89–563, 80 Stat. 718 (15 U.S.C. 1392, 1401, 1421, 1423); delegation of authority at 49 CFR 1.50)

[38 FR 31301, Nov. 13, 1973, as amended at 39 FR 4087, Feb. 1, 1974; 39 FR 5192, Feb. 11, 1974; 39 FR 12105, Apr. 3, 1974; 39 FR 19481, June 3, 1974; 40 FR 5530, Feb. 6, 1975; 43 FR 30542, July 17, 1978; 43 FR 50441, Oct. 30, 1978; 48 FR 25209, June 6, 1983; 50 FR 10773, Mar. 18, 1985; 54 FR 38386, Sept. 18, 1989; 61 FR 29494, June 11, 1996; 63 FR 28921, May 27, 1998; 68 FR 38148, June 26, 2003; 70 FR 300, Jan. 4, 2005; 71 FR 885, Jan. 6, 2006; 72 FR 49210, Aug. 28, 2007]

§ 571.120 Tire selection and rims and motor home/recreation vehicle trailer load carrying capacity information for motor vehicles with a GVWR of more than 4,536 kilograms (10,000 pounds).

S1. *Scope*. This standard specifies tire and rim selection requirements, rim marking requirements and motor home/recreation vehicle trailer load carrying capacity information.

S2. *Purpose*. The purpose of this standard is to provide safe operational performance by ensuring that vehicles to which it applies are equipped with tires of adequate size and load rating and with rims of appropriate size and type designation, and by ensuring that consumers are informed of motor home/recreation vehicle trailer load carrying capacity.

S3. *Application*. This standard applies to motor vehicles with a gross vehicle weight rating (GVWR) of more than 4,536 kilograms (10,000 pounds and motorcycles, to rims for use on those vehicles, and to non-pneumatic spare tire assemblies for use on those vehicles.

S4. *Definitions*. All terms defined in the Act and the rules and standards issued under its authority are used as defined therein.

Rim base means the portion of a rim remaining after removal of all split or continuous rim flanges, side rings, and locking rings that can be detached from the rim.

Rim size designation means rim diameter and width.

Rim diameter means nominal diameter of the bead seat.

Rim width means nominal distance between rim flanges.

Rim type designation means the industry or manufacturer's designation for a rim by style or code.

Weather side means the surface area of the rim not covered by the inflated tire.

S5. *Requirements*.

S5.1 *Tire and rim selection*.

S5.1.1 Except as specified in S5.1.3, each vehicle equipped with pneumatic tires for highway service shall be equipped with tires that meet the requirements of § 571.109, § 571.119 or § 571.139, and rims that are listed by the manufacturer of the tires as suitable for use with those tires, in accordance with S4.4 of § 571.109 or S5.1 of § 571.119, as applicable, except that vehicles may be equipped with a non-pneumatic spare tire assembly that meets the requirements of § 571.129, New non-pneumatic tires for passenger cars, and S8 of this standard. Vehicles equipped with such an assembly shall meet the requirements of S5.3.3, S7, and S9 of this standard.

S5.1.2 Except in the case of a vehicle which has a speed attainable in 3.2 kilometers of 80 kilometers per hour or less, the sum of the maximum load ratings of the tires fitted to an axle shall be not less than the gross axle weight rating (GAWR) of the axle system as specified on the vehicle's certification label required by 49 CFR part 567. Except in the case of a vehicle which has a speed attainable in 2 miles of 50 mph or less, the sum of the maximum load ratings of the tires fitted to an axle shall be not less than the gross axle weight rating (GAWR) of the axle system as specified on the vehicle's certification label required by 49 CFR part 567. If the certification label shows more than one GAWR for the axle system, the sum shall be not less than the GAWR corresponding to the size designation of the tires fitted to the axle. If the size designation of the tires fitted to the axle does not appear on the certification label, the sum shall be not less than the lowest GAWR appearing on the label. When a passenger car tire is installed on a multipurpose passenger vehicle, truck, bus, or trailer, the tire's load rating shall be reduced by dividing by 1.10 before calculating the sum (i.e., the sum of the load ratings of the tires on each axle, when the tires' load carrying capacity at the recommended tire cold inflation pressure is reduced by dividing by 1.10, must be appropriate for the GAWR).

S5.1.3 In place of tires that meet the requirements of Standard No. 119, a truck, bus, or trailer may at the request of a purchaser be equipped at the place of manufacture of the vehicle with retreaded or used tires owned or leased by the purchaser, if the sum of the maximum load ratings meets the requirements of S5.1.2. Used tires employed under this provision must have been originally manufactured to comply with Standard No. 119, as evidenced by the DOT symbol.

S5.2 *Rim marking*. Each rim or, at the option of the manufacturer in the case of a single-piece wheel, wheel disc shall be marked with the information listed in paragraphs (a) through (e) of this paragraph, in lettering not less than 3 millimeters high, impressed to a depth or, at the option of the manufacturer, embossed to a height of not less than 0.125 millimeters. The information listed in paragraphs (a) through (c) of this paragraph shall appear on the weather side. In the case of rims of multi piece construction, the information listed in paragraphs (a) through (e) of this paragraph shall appear on the rim base and the information listed in paragraphs (b) and (d) of this paragraph shall also appear on each other part of the rim.

(a) A designation which indicates the source of the rim's published nominal dimensions, as follows:

(1) ''T'' indicates The Tire and Rim Association.

(2) ''E'' indicates The European Tyre and Rim Technical Organisation

(3) ''J'' indicates Japan Automobile Tire Manufacturers' Association, Inc.

(4) ''D'' indicates Deutsche Industrie Norm.

(5) ''B'' indicates British Standards Institution.

(6) ''S'' indicates Scandinavian Tire and Rim Organization.

(7) ''A'' indicates The Tyre and Rim Association of Australia.

(8) ''N'' indicates an independent listing pursuant to S4.4.1(a) of Standard No. 109 or S5.1(a) of Standard No. 119.

(b) The rim size designation, and in case of multipiece rims, the rim type designation. For example: 20×5.50, or 20×5.5.

(c) The symbol DOT, constituting a certification by the manufacturer of the rim that the rim complies with all applicable motor vehicle safety standards.

(d) A designation that identifies the manufacturer of the rim by name, trademark, or symbol.

(e) The month, day and year or the month and year of manufacture, expressed either numerically or by use of a symbol, at the option of the manufacturer. For example:

''September 4, 1976'' may be expressed numerically as:

90476, 904, or 76
76 904

''September 1976'' may be expressed as:

976, 9, or 76
76 9

(1) Any manufacturer that elects to express the date of manufacture by means of a symbol shall notify NHTSA

in writing of the full names and addresses of all manufacturers and brand name owners utilizing that symbol and the name and address of the trademark owner of that symbol, if any. The notification shall describe in narrative form and in detail how the month, day, and year or the month and year are depicted by the symbol. Such description shall include an actual size graphic depiction of the symbol, showing and/or explaining the interrelationship of the component parts of the symbol as they will appear on the rim or single piece wheel disc, including dimensional specifications, and where the symbol will be located on the rim or single piece wheel disc. The notification shall be received by NHTSA at least 60 calendar days prior to first use of the symbol. The notification shall be mailed to the Office of Vehicle Safety Compliance, National Highway Traffic Safety Administration, 400 Seventh Street SW., Washington, DC 20590. All information provided to NHTSA under this paragraph will be placed in the public docket.

(2) Each manufacturer of wheels shall provide an explanation of its date of manufacture symbol to any person upon request.

S5.3 Each vehicle shall show the information specified in S5.3.1 and S5.3.2 and, in the case of a vehicle equipped with a non-pneumatic spare tire, the information specified in S5.3.3, in the English language, lettered in block capitals and numerals not less than 2.4 millimeters high and in the format set forth following this paragraph. This information shall appear either—

(a) After each GAWR listed on the certification label required by § 567.4 or § 567.5 of this chapter; or at the option of the manufacturer,

(b) On the tire information label affixed to the vehicle in the manner, location, and form described in § 567.4 (b) through (f) of this chapter as appropriate of each GVWR–GAWR combination listed on the certification label.

S5.3.1 *Tires*. The size designation (not necessarily for the tires on the vehicle) and the recommended cold inflation pressure for those tires such that the sum of the load ratings of the tires on each axle (when the tires' load carrying capacity at the specified pressure is reduced by dividing by 1.10, in the case of a tire subject to FMVSS No. 109) is appropriate for the GAWR as calculated in accordance with S5.1.2.

S5.3.2. *Rims*. The size designation and, if applicable, the type designation of Rims (not necessarily those on the vehicle) appropriate for those tires.

TRUCK EXAMPLE—SUITABLE TIRE-RIM CHOICE

GVWR: 7,840 KG (17,289 LB)
GAWR: FRONT—2,850 KG (6,280 LB) WITH 7.50–20(D) TIRES, 20×6.00 RIMS AT 520 KPA (75 PSI) COLD SINGLE
GAWR: REAR—4,990 KG (11,000 LB) WITH 7.50–20(D) TIRES, 20×6.00 RIMS, AT 450 KPA (65 PSI) COLD DUAL
GVWR: 13,280 KG (29,279 LB)
GAWR: FRONT—4,826 KG (10,640 LB) WITH 10.00–20(F) TIRES, 20×7.50 RIMS, AT 620 KPA (90 PSI) COLD SINGLE
GAWR: REAR—8,454 KG (18,639 LB) WITH 10.00–20(F) TIRES, 20×2.70 RIMS, AT 550 KPA (80 PSI) COLD DUAL

S5.3.3 The non-pneumatic tire identification code, with which that assembly is labeled pursuant to S4.3(a) of § 571.129.

S6. *Load Limits for Non-Pneumatic Spare Tires*. The highest vehicle maximum load on the tire for the vehicle shall not be greater than the load rating for the non-pneumatic spare tire.

S7 *Labeling Requirements for Non-Pneumatic Spare Tires or Tire Assemblies*. Each non-pneumatic tire or, in the case of a non-pneumatic tire assembly in which the non-pneumatic tire is an integral part of the assembly, each non-pneumatic tire assembly shall include, in letters or numerals not less than 4 millimeters high, the information specified in paragraphs S7 (a) and (b). The information shall be permanently molded, stamped, or otherwise permanently marked into or onto the non-pneumatic tire or non-pneumatic tire assembly, or shall appear on a label that is permanently attached to the tire or tire assembly. If a label is used, it shall be subsurface printed, made of material that is resistant to fade, heat, moisture and abrasion, and attached in such a manner that it cannot be removed without destroying or defacing the label on the non-pneumatic tire or tire assembly. The information specified in paragraphs S7 (a) and (b) shall

appear on both sides of the non-pneumatic tire or tire assembly, except, in the case of a non-pneumatic tire assembly which has a particular side that must always face outward when mounted on a vehicle, in which case the information specified in paragraphs S7 (a) and (b) shall only be required on the outward facing side. The information shall be positioned on the tire or tire assembly such that it is not placed on the tread or the outermost edge of the tire and is not obstructed by any portion of any non-pneumatic rim or wheel center member designated for use with that tire in this standard or in Standard No. 129.

(a) FOR TEMPORARY USE ONLY; and

(b) MAXIMUM 80 KM/H (50 M.P.H.).

S8. *Requirements for Vehicles Equipped with Non-Pneumatic Spare Tire Assemblies*

S8.1 *Vehicle Placarding Requirements.* A placard, permanently affixed to the inside of the spare tire stowage area or equally accessible location adjacent to the non-pneumatic spare tire assembly, shall display the information set forth in S7 in block capitals and numerals not less than 6 millimeters high preceded by the words ''IMPORTANT—USE OF SPARE TIRE'' in letters not less than 9 millimeters high.

S8.2 *Supplementary Information.* The owner's manual of the vehicle shall contain, in writing in the English language and in not less than 10 point type, the following information under the heading ''IMPORTANT—USE OF SPARE TIRE'':

(a) A statement indicating the information related to appropriate use for the non-pneumatic spare tire including at a minimum the information set forth in S8 (a) and (b) and either the information set forth in S5.3.6 or a statement that the information set forth in S5.3.6 is located on the vehicle placard and on the non-pneumatic tire;

(b) An instruction to drive carefully when the non-pneumatic spare tire is in use, and to install the proper pneumatic tire and rim at the first reasonable opportunity; and

(c) A statement that operation of the vehicle is not recommended with more than one non-pneumatic spare tire in use at the same time.

S9 *Non-Pneumatic Rims and Wheel Center Members*

S9.1 *Non-Pneumatic Rim Requirements.* Each non-pneumatic rim that is part of a separable non-pneumatic spare tire assembly shall be constructed to the dimensions of a non-pneumatic rim that is listed pursuant to S4.4 of §571.129 for use with the non-pneumatic tire, designated by its non-pneumatic tire identification code, with which the vehicle is equipped.

S9.2 *Wheel Center Member Requirements.* Each wheel center member that is part of a separable non-pneumatic spare tire assembly shall be constructed to the dimensions of a wheel center member that is listed pursuant to S4.4 of §571.129 for use with the non-pneumatic tire, designated by its non-pneumatic tire identification code, with which the vehicle is equipped.

S10. Each motor home and recreation vehicle (RV) trailer must meet the applicable requirements in S10.

S10.1 On motor homes, the sum of the gross axle weight ratings (GAWR) of all axles on the vehicle must not be less than the gross vehicle weight rating (GVWR).

S10.2 On RV trailers, the sum of the GAWRs of all axles on the vehicle plus the vehicle manufacturer's recommended tongue weight must not be less than the GVWR. If tongue weight is specified as a range, the minimum value must be used.

S10.3 The tires on each motor home and RV trailer at first retail sale must be the same size as the tire size on the labeling required by S5.3.

S10.4 Each motor home and RV trailer single stage or final stage manufacturer must affix either a motor home occupant and cargo carrying capacity (OCCC) label (Figure 1) or a RV trailer cargo carrying capacity (CCC) label (Figure 2) to its vehicles that meets the following criteria:

S10.4.1 The RV load carrying capacity labels (Figures 1 and 2) must be legible, visible, moisture resistant, presented in the English language, have a minimum print size of 2.4 millimeters (3⁄32 inches) high and be printed in black print on a yellow background.

S10.4.2 The weight value for load carrying capacity on the RV load carrying capacity labels (Figures 1 and 2)

must be displayed to the nearest kilogram with conversion to the nearest pound and must be such that the vehicle's weight does not exceed its GVWR when loaded with the stated load carrying capacity. The UVW and the GVWR used to determine the RV's load carrying capacity must reflect the weights and design of the motor home or RV trailer as configured for delivery to the dealer/service facility. If applicable, the weight of full propane tanks must be included in the RV's UVW and the weight of on-board potable water must be treated as cargo.

S10.4.3 The RV load carrying capacity labels (Figures 1 and 2) must be:

(a) Permanently affixed and must be visibly located on the interior of the forward-most exterior passenger door on the right side of the vehicle; or

(b) If a permanent RV load carrying capacity label (Figure 1 or 2) is affixed in the location specified at S5.3(b), a temporary version of the RV load carrying capacity label (Figure 1 or 2) may be visibly located on the interior of the forward-most exterior passenger door on the right side of the vehicle.

S10.4.4 Permanent and temporary motor home OCCC labels must contain the following information in accordance with Figure 1:

(a) The statement: ''MOTOR HOME OCCUPANT AND CARGO CARRYING CAPACITY'' in block letters.

(b) The Vehicle Identification Number (VIN).

(c) The statement ''THE COMBINED WEIGHT OF OCCUPANTS AND CARGO SHOULD NEVER EXCEED: XXX kg or XXX lbs'' in block letters with appropriate values included.

(d) The statement ''Safety belt equipped seating capacity: XXX'' with the appropriate value included. This is the total number of safety belt equipped seating positions.

(e) The statement: ''CAUTION: A full load of water equals XXX kg or XXX lbs of cargo @ 1 kg/L (8.3 lb/gal) and the tongue weight of a towed trailer counts as cargo'' with appropriate values included.

S10.4.5 Permanent and temporary RV trailer CCC labels must contain the following information in accordance with Figure 2:

(a) The statement: ''RECREATION VEHICLE TRAILER CARGO CARRYING CAPACITY'' in block letters.

(b) The Vehicle Identification Number (VIN).

(c) The statement: ''THE WEIGHT OF CARGO SHOULD NEVER EXCEED: XXX kg or XXX lbs'' in block letters with appropriate values included.

(d) The statement: ''CAUTION: A full load of water equals XXX kg or XXX lbs of cargo @ 1 kg/L (8.3 lb/gal)'' with appropriate values included.

S10.5 *Weight added to motor homes and RV trailers between final vehicle certification and first retail sale of the vehicle.*

S10.5.1 If weight exceeding 45.4 kg (100 pounds) is added to a motor home or RV trailer between final vehicle certification and first retail sale of the vehicle, the load carrying capacity values on the RV load carrying capacity labels (Figures 1 and 2) required by S10.4 must be corrected using one or a combination of the following methods:

(a) Permanently affix the load carrying capacity modification label (Figure 3) which displays the amount the load carrying capacity is reduced to the nearest kilogram with conversion to the nearest pound, within 25 millimeters of the original, permanent RV load carrying capacity label (Figure 1 or 2). The load carrying capacity modification label must be legible, visible, permanent, moisture resistant, presented in the English language, have a minimum print size of 2.4 millimeters (3/32 inches) high and be printed in black print on a yellow background. If the manufacturer selects S10.4.3(b), apply a temporary version of the load carrying capacity modification label (Figure 3) within 25 millimeters of the original, temporary RV load carrying capacity label (Figure 1 or 2) on the interior of the forward-most exterior passenger door on the right side of the vehicle. Both temporary and permanent versions of the load carrying capacity modification label (Figure 3) may be printed without values and values may be legibly applied to the label with a black, fine point, indelible marker. The label must contain the statements ''CAUTION—LOAD CARRYING CAPACITY REDUCED'' in block letters and ''Modifications to this vehicle have

reduced the original load carrying capacity by XXX kg or XXX lbs'' in accordance with Figure 3 with appropriate values in place of XXX. If two load carrying capacity modification labels are required (one permanent and one temporary), the weight values on each must agree, or

(b) Modify the original permanent RV load carrying capacity label (Figure 1 or 2) with correct load carrying capacity weight values. If the manufacturer selects S10.4.3(b), the temporary RV load carrying capacity label (Figure 1 or 2) must also be modified with correct load carrying capacity weight values. Modification of labels requires a machine printed overlay with printed corrected values or blanks for corrected values that may be entered with a black, fine-point, indelible marker. Crossing out old values and entering corrected values on the original label is not permissible, or

(c) Replace the original, permanent RV load carrying capacity label (Figure 1 or 2) with the same label containing correct load carrying capacity weight values. If the manufacturer selects S10.4.3(b), the temporary RV load carrying capacity label (Figure 1 or 2) must also be replaced with the same label containing correct load carrying capacity weight values.

S10.5.2 Corrected load carrying capacity weight values or the weight amount the load carrying capacity is reduced, must reflect the total weight added between final vehicle certification and first retail sale and must be accurate within one percent of the actual added weight. No re-labeling is required if the weight of the vehicle is reduced between final vehicle certification and the first retail sale.

MOTOR HOME OCCUPANT AND CARGO CARRYING CAPACITY
VIN: ##################
THE COMBINED WEIGHT OF OCCUPANTS AND CARGO SHOULD NEVER EXCEED:
XXX kg or XXX lbs
Safety belt equipped seating capacity: XXX
CAUTION:
A full load of water equals XXX kg or XXX lbs of cargo @ 1 kg/L (8.3 lb/gal) and the tongue weight of a towed trailer counts as cargo

Figure 1 - Motor Home Occupant and Cargo Carrying Capacity Label

RECREATION VEHICLE TRAILER CARGO CARRYING CAPACITY
VIN: ##################
THE WEIGHT OF CARGO SHOULD NEVER EXCEED:
XXX kg or XXX lbs
CAUTION:
A full load of water equals XXX kg or XXX lbs of cargo @ 1 kg/L (8.3 lb/gal)

Figure 2 - RV Trailer Cargo Carrying Capacity Label

CAUTION: LOAD CARRYING CAPACITY REDUCED
Modifications to this vehicle have reduced the original load carrying capacity by
_____ kg or _____lbs

Figure 3 - Load Carrying Capacity Modification Label

(Authority: Secs. 102, 119, and 202, Pub. L. 89–563, 80 Stat. 718 (15 U.S.C. 1392, 1407, and 1422); delegation of authority at 49 CFR 1.50)

[42 FR 7144, Feb. 7, 1977, as amended at 49 FR 20824, May 17, 1984; 54 FR 38386, Sept. 18, 1989; 55 FR 29589, July 20, 1990; 56 FR 19311, Apr. 26, 1991; 58 FR 13426, Mar. 11, 1993; 59 FR 25578, May 17, 1994; 60 FR 13644, Mar. 14, 1995; 61 FR 29495, June 11, 1996; 63 FR 28922, May 27, 1998; 67 FR 69627, Nov. 18, 2002; 68 FR 38149, June 26, 2003; 68 FR 37982, June 26, 2004; 71 FR 886, Jan. 6, 2006; 72 FR 68463, 68464, Dec. 4, 2007]

§ 571.121 Standard No. 121; Air brake systems.

S1. *Scope*. This standard establishes performance and equipment requirements for braking systems on vehicles equipped with air brake systems.

S2. *Purpose*. The purpose of this standard is to insure safe braking performance under normal and emergency conditions.

S3. *Application*. This standard applies to trucks, buses, and trailers equipped with air brake systems. However, it does not apply to:

(a) Any trailer that has a width of more than 102.36 inches with extendable equipment in the fully retracted position and is equipped with two short track axles in a line across the width of the trailer.

(b) Any vehicle equipped with an axle that has a gross axle weight rating (GAWR) of 29,000 pounds or more;

(c) Any truck or bus that has a speed attainable in 2 miles of not more than 33 mph;

(d) Any truck that has a speed attainable in 2 miles of not more than 45 mph, an unloaded vehicle weight that is not less than 95 percent of its gross vehicle weight rating (GVWR), and no capacity to carry occupants other than the driver and operating crew;

(e) Any trailer that has a GVWR of more than 120,000 pounds and whose body conforms to that described in the definition of heavy hauler trailer set forth in S4;

(f) Any trailer that has an unloaded vehicle weight which is not less than 95 percent of its GVWR; and

(g) Any load divider dolly.

S4. *Definitions*.

Agricultural commodity trailer means a trailer that is designed to transport bulk agricultural commodities in off-road harvesting sites and to a processing plant or storage location, as evidenced by skeletal construction that accommodates harvest containers, a maximum length of 28 feet, and an arrangement of air control lines and reservoirs that minimizes damage in field operations.

Air brake system means a system that uses air as a medium for transmitting pressure or force from the driver control to the service brake, including an air-over-hydraulic brake subsystem, but does not include a system that uses compressed air or vacuum only to assist the driver in applying muscular force to hydraulic or mechanical components.

Air-over-hydraulic brake subsystem means a subsystem of the air brake system that uses compressed air to transmit a force from the driver control to a hydraulic brake system to actuate the service brakes.

Antilock brake system or *ABS* means a portion of a service brake system that automatically controls the degree of rotational wheel slip during braking by:

(1) Sensing the rate of angular rotation of the wheels;

(2) Transmitting signals regarding the rate of wheel angular rotation to one or more controlling devices which interpret those signals and generate responsive controlling output signals; and

(3) Transmitting those controlling signals to one or more modulators which adjust brake actuating forces in response to those signals.

Auto transporter means a truck and a trailer designed for use in combination to transport motor vehicles, in that the towing vehicle is designed to carry cargo at a location other than the fifth wheel and to load this cargo only by means of the towed vehicle.

Common diaphragm means a single brake chamber diaphragm which is a component of the parking, emergency, and service brake systems.

Container chassis trailer means a semitrailer of skeleton construction limited to a bottom frame, one or more axles, specially built and fitted with locking devices for the transport of intermodal shipping containers, so that

(Authority: Secs. 102, 119, and 202, Pub. L. 89–563, 80 Stat. 718 (15 U.S.C. 1392, 1407, and 1422); delegation of authority at 49 CFR 1.50)

[42 FR 7144, Feb. 7, 1977]

EDITORIAL NOTE: For FEDERAL REGISTER citations affecting § 571.120 see the List of CFR Sections Affected which appears in the Finding Aids section of the printed volume and on GPO Access.

§ 571.121 Standard No. 121; Air brake systems.

S1. *Scope*. This standard establishes performance and equipment requirements for braking systems on vehicles equipped with air brake systems.

S2. *Purpose*. The purpose of this standard is to insure safe braking performance under normal and emergency conditions.

S3. *Application*. This standard applies to trucks, buses, and trailers equipped with air brake systems. However, it does not apply to:

(a) Any trailer that has a width of more than 102.36 inches with extendable equipment in the fully retracted position and is equipped with two short track axles in a line across the width of the trailer.

(b) Any vehicle equipped with an axle that has a gross axle weight rating (GAWR) of 29,000 pounds or more;

(c) Any truck or bus that has a speed attainable in 2 miles of not more than 33 mph;

(d) Any truck that has a speed attainable in 2 miles of not more than 45 mph, an unloaded vehicle weight that is not less than 95 percent of its gross vehicle weight rating (GVWR), and no capacity to carry occupants other than the driver and operating crew;

(e) Any trailer that has a GVWR of more than 120,000 pounds and whose body conforms to that described in the definition of heavy hauler trailer set forth in S4;

(f) Any trailer that has an unloaded vehicle weight which is not less than 95 percent of its GVWR; and

(g) Any load divider dolly.

S4. *Definitions*.

Agricultural commodity trailer means a trailer that is designed to transport bulk agricultural commodities in off-road harvesting sites and to a processing plant or storage location, as evidenced by skeletal construction that accommodates harvest containers, a maximum length of 28 feet, and an arrangement of air control lines and reservoirs that minimizes damage in field operations.

Air brake system means a system that uses air as a medium for transmitting pressure or force from the driver control to the service brake, including an air-over-hydraulic brake subsystem, but does not include a system that uses compressed air or vacuum only to assist the driver in applying muscular force to hydraulic or mechanical components.

Air-over-hydraulic brake subsystem means a subsystem of the air brake system that uses compressed air to transmit a force from the driver control to a hydraulic brake system to actuate the service brakes.

Antilock brake system or *ABS* means a portion of a service brake system that automatically controls the degree of rotational wheel slip during braking by:

(1) Sensing the rate of angular rotation of the wheels;

(2) Transmitting signals regarding the rate of wheel angular rotation to one or more controlling devices which interpret those signals and generate responsive controlling output signals; and

(3) Transmitting those controlling signals to one or more modulators which adjust brake actuating forces in response to those signals.

Auto transporter means a truck and a trailer designed for use in combination to transport motor vehicles, in that the towing vehicle is designed to carry cargo at a location other than the fifth wheel and to load this cargo only by means of the towed vehicle.

Common diaphragm means a single brake chamber diaphragm which is a component of the parking, emergency, and service brake systems.

Container chassis trailer means a semitrailer of skeleton construction limited to a bottom frame, one or more axles, specially built and fitted with locking devices for the transport of intermodal shipping containers, so that when the chassis and container are assembled, the units serve the same function as an over the road trailer.

Directly controlled wheel means a wheel for which the degree of rotational wheel slip is sensed, either at that wheel or on the axle shaft for that wheel and corresponding signals are transmitted to one or more modulators that adjust the brake actuating forces at that wheel. Each modulator may also adjust the brake actuating forces at other wheels that are on the same axle or in the same axle set in response to the same signal or signals.

Effective projected luminous lens area means that area of the projection on a plane perpendicular to the lamp axis of that portion of the light-emitting surface that directs light to the photometric test pattern, and does not include mounting hole bosses, reflex reflector area, beads or rims that may glow or produce small areas of increased intensity as a result of uncontrolled light from small areas (½ degree radius around the test point).

Full-treadle brake application means a brake application in which the treadle valve pressure in any of the valve's output circuits reaches 85 pounds per square inch (psi) within 0.2 seconds after the application is initiated, or in which maximum treadle travel is achieved within 0.2 seconds after the application is initiated.

Heavy hauler trailer means a trailer which has one or more of the following characteristics, but which is not a container chassis trailer:

(1) Its brake lines are designed to adapt to separation or extension of the vehicle frame; or

(2) Its body consists only of a platform whose primary cargo-carrying surface is not more than 40 inches above the ground in an unloaded condition, except that it may include sides that are designed to be easily removable and a permanent ''front end structure'' as that term is used in §393.106 of this title.

Independently controlled wheel means a directly controlled wheel for which the modulator does not adjust the brake actuating forces at any other wheel on the same axle.

Indirectly controlled wheel means a wheel at which the degree of rotational wheel slip is not sensed, but at which the modulator of an antilock braking system adjusts its brake actuating forces in response to signals from one or more sensed wheel(s).

Initial brake temperature means the average temperature of the service brakes on the hottest axle of the vehicle 0.2 mile before any brake application in the case of road tests, or 18 seconds before any brake application in the case of dynamometer testing.

Intermodal shipping container means a reusable, transportable enclosure that is especially designed with integral locking devices for securing the container to the trailer to facilitate the efficient and bulk shipping and transfer of goods by, or between various modes of transport, such as highway, rail, sea and air.

Load divider dolly means a trailer composed of a trailer chassis and one or more axles, with no solid bed, body, or container attached, and which is designed exclusively to support a portion of the load on a trailer or truck excluded from all the requirements of this standard.

Maximum drive-through speed means the highest possible constant speed at which the vehicle can be driven through 200 feet of a 500-foot radius curve arc without leaving the 12-foot lane.

Maximum treadle travel means the distance that the treadle moves from its position when no force is applied to its position when the treadle reaches a full stop.

Peak friction coefficient or *PFC* means the ratio of the maximum value of braking test wheel longitudinal force to the simultaneous vertical force occurring prior to wheel lockup, as the braking torque is progressively increased.

Pulpwood trailer means a trailer that is designed exclusively for harvesting logs or pulpwood and constructed with a skeletal frame with no means for attachment of a solid bed, body, or container, and with an arrangement of air control lines and reservoirs designed to minimize damage in off-road operations.

Tandem axle means a group or set of two or more axles placed in a close arrangement, one behind the other, with the centerlines of adjacent axles not more than 72 inches apart.

Straddle trailer means a trailer that is designed to transport bulk agricultural commodities from the harvesting location as evidenced by a framework that is driven over the cargo and lifting arms that suspend the cargo for transit.

Wheel lockup means 100 percent wheel slip.

S5. *Requirements*. Each vehicle shall meet the following requirements under the conditions specified in S6.

S5.1 *Required equipment for trucks and buses*. Each truck and bus shall have the following equipment:

S5.1.1 *Air compressor*. An air compressor of sufficient capacity to increase air pressure in the supply and service reservoirs from 85 psi to 100 psi when the engine is operating at the vehicle manufacturer's maximum recommended r.p.m. within a time, in seconds, determined by the quotient (Actual reservoir capacity×25)/Required reservoir capacity.

S5.1.1.1 *Air compressor cut-in pressure*. The air compressor governor cut-in pressure for each bus shall be 85 p.s.i. or greater. The air compressor governor cut-in pressure for each truck shall be 100 p.s.i. or greater.

S5.1.2 *Reservoirs*. One or more service reservoir systems, from which air is delivered to the brake chambers, and either an automatic condensate drain valve for each service reservoir or a supply reservoir between the service reservoir system and the source of air pressure.

S5.1.2.1 The combined volume of all service reservoirs and supply reservoirs shall be at least 12 times the combined volume of all service brake chambers. For each brake chamber type having a full stroke at least as great as the first number in Column 1 of Table V, but no more than the second number in Column 1 of Table V, the volume of each brake chamber for purposes of calculating the required combined service and supply reservoir volume shall be either that specified in Column 2 of Table V or the actual volume of the brake chamber at maximum travel of the brake piston or pushrod, whichever is lower. The volume of a brake chamber not listed in Table V is the volume of the brake chamber at maximum travel of the brake piston or pushrod. The reservoirs of the truck portion of an auto transporter need not meet this requirement for reservoir volume.

S5.1.2.2 Each reservoir shall be capable of withstanding an internal hydrostatic pressure of five times the compressor cutout pressure or 500 psi, whichever is greater, for 10 minutes.

S5.1.2.3 Each service reservoir system shall be protected against loss of air pressure due to failure or leakage in the system between the service reservoir and the source of air pressure, by check valves or equivalent devices whose proper functioning can be checked without disconnecting any air line or fitting.

S5.1.2.4 Each reservoir shall have a condensate drain valve that can be manually operated.

S5.1.3 *Towing vehicle protection system*. If the vehicle is intended to tow another vehicle equipped with air brakes, a system to protect the air pressure in the towing vehicle from the effects of a loss of air pressure in the towed vehicle.

S5.1.4 *Pressure gauge*. A pressure gauge in each service brake system, readily visible to a person seated in the normal driving position, that indicates the service reservoir system air pressure. The accuracy of the gauge shall be within plus or minus 7 percent of the compressor cut-out pressure.

S5.1.5 *Warning signal*. A signal, other than a pressure gauge, that gives a continuous warning to a person in the normal driving position when the ignition is in the ''on'' (''run'') position and the air pressure in the service reservoir system is below 60 psi. The signal shall be either visible within the driver's forward field of view, or both audible and visible.

S5.1.6 *Antilock brake system*.

S5.1.6.1(a) Each single-unit vehicle manufactured on or after March 1, 1998, shall be equipped with an antilock brake system that directly controls the wheels of at least one front axle and the wheels of at least one rear axle of the vehicle. Wheels on other axles of the vehicle may be indirectly controlled by the antilock brake system.

(b) Each truck tractor manufactured on or after March 1, 1997, shall be equipped with an antilock brake system that directly controls the wheels

of at least one front axle and the wheels of at least one rear axle of the vehicle, with the wheels of at least one axle being independently controlled. Wheels on other axles of the vehicle may be indirectly controlled by the antilock brake system. A truck tractor shall have no more than three wheels controlled by one modulator.

S5.1.6.2 *Antilock malfunction signal and circuit.*

(a) Each truck tractor manufactured on or after March 1, 1997, and each single unit vehicle manufactured on or after March 1, 1998, shall be equipped with an indicator lamp, mounted in front of and in clear view of the driver, which is activated whenever there is a malfunction that affects the generation or transmission of response or control signals in the vehicle's antilock brake system. The indicator lamp shall remain activated as long as such a malfunction exists, whenever the ignition (start) switch is in the ''on'' (''run'') position, whether or not the engine is running. Each message about the existence of such a malfunction shall be stored in the antilock brake system after the ignition switch is turned to the ''off'' position and automatically reactivated when the ignition switch is again turned to the ''on'' (''run'') position. The indicator lamp shall also be activated as a check of lamp function whenever the ignition is turned to the ''on'' (''run'') position. The indicator lamp shall be deactivated at the end of the check of lamp function unless there is a malfunction or a message about a malfunction that existed when the key switch was last turned to the ''off'' position.

(b) Each truck tractor manufactured on or after March 1, 2001, and each single unit vehicle manufactured on or after March 1, 2001, that is equipped to tow another air-braked vehicle, shall be equipped with an electrical circuit that is capable of transmitting a malfunction signal from the antilock brake system(s) on one or more towed vehicle(s) (e.g., trailer(s) and dolly(ies)) to the trailer ABS malfunction lamp in the cab of the towing vehicle, and shall have the means for connection of this electrical circuit to the towed vehicle. Each such truck tractor and single unit vehicle shall also be equipped with an indicator lamp, separate from the lamp required in S5.1.6.2(a), mounted in front of and in clear view of the driver, which is activated whenever the malfunction signal circuit described above receives a signal indicating an ABS malfunction on one or more towed vehicle(s). The indicator lamp shall remain activated as long as an ABS malfunction signal from one or more towed vehicle(s) is present, whenever the ignition (start) switch is in the ''on'' (''run'') position, whether or not the engine is running. The indicator lamp shall also be activated as a check of lamp function whenever the ignition is turned to the ''on'' (''run'') position. The indicator lamp shall be deactivated at the end of the check of lamp function unless a trailer ABS malfunction signal is present.

(c) [Reserved]

S5.1.6.3 *Antilock power circuit for towed vehicles.* Each truck tractor manufactured on or after March 1, 1997, and each single unit vehicle manufactured on or after March 1, 1998, that is equipped to tow another air-braked vehicle shall be equipped with one or more electrical circuits that provide continuous power to the antilock system on the towed vehicle or vehicles whenever the ignition (start) switch is in the ''on'' (''run'') position. Such a circuit shall be adequate to enable the antilock system on each towed vehicle to be fully operable.

S5.1.7 *Service brake stop lamp switch.* A switch that lights the stop lamps when the service brake control is statically depressed to a point that produces a pressure of 6 psi or less in the service brake chambers.

S5.1.8 *Brake distribution and automatic adjustment.* Each vehicle shall be equipped with a service brake system acting on all wheels.

(a) *Brake adjuster.* Wear of the service brakes shall be compensated for by means of a system of automatic adjustment. When inspected pursuant to S5.9, the adjustment of the service brakes shall be within the limits recommended by the vehicle manufacturer.

(b) *Brake indicator.* For each brake equipped with an external automatic adjustment mechanism and having an

exposed pushrod, the condition of service brake under-adjustment shall be displayed by a brake adjustment indicator that is discernible when viewed with 20/40 vision from a location adjacent to or underneath the vehicle, when inspected pursuant to S5.9.

S5.2 *Required equipment for trailers.* Each trailer shall have the following equipment:

S5.2.1 *Reservoirs.* One or more reservoirs to which the air is delivered from the towing vehicle.

S5.2.1.1 The total volume of each service reservoir shall be at least eight times the combined volume of all service brake chambers serviced by that reservoir. For each brake chamber type having a full stroke at least as great as the first number in Column 1 of Table V, but no more than the second number in column 1, the volume of each brake chamber for purposes of calculating the required total service reservoir volume shall be either the number specified in Column 2 of Table V or the actual volume of the brake chamber at maximum travel of the brake piston or pushrod, whichever is lower. The volume of a brake chamber not listed in Table V is the volume of the brake chamber at maximum travel of the brake piston or pushrod. The reservoirs on a heavy hauler trailer and the trailer portion of an auto transporter need not meet this requirement for reservoir volume.

S5.2.1.2 Each reservoir shall be capable of withstanding an internal hydrostatic pressure of 500 psi for 10 minutes.

S5.2.1.3 Each reservoir shall have a condensate drain valve that can be manually operated.

S5.2.1.4 Each service reservoir shall be protected against loss of air pressure due to failure or leakage in the system between the service reservoir and its source of air pressure by check valves or equivalent devices.

S5.2.2 *Brake distribution and automatic adjustment.* Each vehicle shall be equipped with a service brake system acting on all wheels.

(a) *Brake adjuster.* Wear of the service brakes shall be compensated for by means of a system of automatic adjustment. When inspected pursuant to S5.9, the adjustment of the service brakes shall be within the limits recommended by the vehicle manufacturer.

(b) *Brake indicator.* For each brake equipped with an external automatic adjustment mechanism and having an exposed pushrod, the condition of service brake under-adjustment shall be displayed by a brake adjustment indicator in a manner that is discernible when viewed with 20/40 vision from a location adjacent to or underneath the vehicle, when inspected pursuant to S5.9.

S5.2.3 *Antilock brake system.*

S5.2.3.1(a) Each semitrailer (including a trailer converter dolly) manufactured on or after March 1, 1998, shall be equipped with an antilock brake system that directly controls the wheels of at least one axle of the vehicle. Wheels on other axles of the vehicle may be indirectly controlled by the antilock brake system.

(b) Each full trailer manufactured on or after March 1, 1998, shall be equipped with an antilock brake system that directly controls the wheels of at least one front axle of the vehicle and at least one rear axle of the vehicle. Wheels on other axles of the vehicle may be indirectly controlled by the antilock brake system.

S5.2.3.2 *Antilock malfunction signal.* Each trailer (including a trailer converter dolly) manufactured on or after March 1, 2001, that is equipped with an antilock brake system shall be equipped with an electrical circuit that is capable of signaling a malfunction in the trailer's antilock brake system, and shall have the means for connection of this antilock brake system malfunction signal circuit to the towing vehicle. The electrical circuit need not be separate or dedicated exclusively to this malfunction signaling function. The signal shall be present whenever there is a malfunction that affects the generation or transmission of response or control signals in the trailer's antilock brake system. The signal shall remain present as long as the malfunction exists, whenever power is supplied to the antilock brake system. Each message about the existence of such a malfunction shall be stored in the antilock brake system whenever power is no longer supplied to the system, and the malfunction signal shall be

automatically reactivated whenever power is again supplied to the trailer's antilock brake system. In addition, each trailer manufactured on or after March 1, 2001, that is designed to tow other air-brake equipped trailers shall be capable of transmitting a malfunction signal from the antilock brake systems of additional trailers it tows to the vehicle towing it.

S5.2.3.3 *Antilock malfunction indicator*.

(a) In addition to the requirements of S5.2.3.2, each trailer and trailer converter dolly shall be equipped with an external antilock malfunction indicator lamp that meets the requirements of S5.2.3.3 (b) through (d).

(b)(1) The lamp shall be designed to conform to the performance requirements of Society of Automotive Engineers (SAE) Recommended Practice J592 JUN92, or J592e, July 1972, *Clearance, Side Marker, and Identification Lamps*, for combination, clearance, and side marker lamps, which are marked with a ''PC'' or ''P2'' on the lens or housing, in accordance with SAE J759 Jan 95, *Lighting Identification Code*. SAE J592 June 92, SAE J592e July 1972, and SAE J759 January 1995, are incorporated by reference and thereby are made part of this standard. The Director of the Federal Register approved the material incorporated by reference in accordance with 5 U.S.C. 552(a) and 1 CFR part 51. Copies of the material may be inspected at NHTSA's Docket Section, 400 Seventh Street, SW., room 5109, Washington, DC, or at the National Archives and Records Administration (NARA). For information on the availability of this material at NARA, call 202–741–6030, or go to: *http://www.archives.gov/federal_register/code_of_federal_regulations/ibr_locations.html*.

(2) The color of the lamp shall be yellow.

(3) The letters ''ABS'' shall be permanently molded, stamped, or otherwise marked or labeled in letters not less than 10 mm (0.4 inches) high on the lamp lens or its housing to identify the function of the lamp. Alternatively, the letters ''ABS'' may be painted on the trailer body or dolly or a plaque with the letters ''ABS'' may be affixed to the trailer body or converter dolly; the letters ''ABS'' shall be not less than 25 mm (1 inch) high. A portion of one of the letters in the alternative identification shall be not more than 150 mm (5.9 inches) from the edge of the lamp lens.

(c) *Location requirements*. (1) Each trailer that is not a trailer converter dolly shall be equipped with a lamp mounted on a permanent structure on the left side of the trailer as viewed from the rear, no closer than 150 mm (5.9 inches), and no farther than 600 mm (23.6 inches) from the red rear side marker lamp, when measured between the closest edge of the effective projected luminous lens area of each lamp.

(2) Each trailer converter dolly shall be equipped with a lamp mounted on a permanent structure of the dolly so that the lamp is not less than 375 mm (14.8 inches) above the road surface when measured from the center of the lamp with the dolly at curb weight. When a person, standing 3 meters (9.8 feet) from the lamp, views the lamp from a perspective perpendicular to the vehicle's centerline, no portion of the lamp shall be obscured by any structure on the dolly.

(3) Each trailer that is not a trailer converter dolly and on which the malfunction indicator lamp cannot be placed within the location specified in S5.2.3.3(c)(1) shall be equipped with a lamp mounted on a permanent structure on the left side of the trailer as viewed from the rear, near the red rear side marker lamp or on the front face of the left rear fender of a trailer equipped with fenders.

(d) The lamp shall be illuminated whenever power is supplied to the antilock brake system and there is a malfunction that affects the generation or transmission of response or control signals in the trailer's antilock brake system. The lamp shall remain illuminated as long as such a malfunction exists and power is supplied to the antilock brake system. Each message about the existence of such a malfunction shall be stored in the antilock brake system whenever power is no longer supplied to the system. The lamp shall be automatically reactivated when power is again supplied to the trailer's antilock brake system. The lamp shall also be activated as a

check of lamp function whenever power is first supplied to the antilock brake system and the vehicle is stationary. The lamp shall be deactivated at the end of the check of lamp function, unless there is a malfunction or a message about a malfunction that existed when power was last supplied to the antilock brake system.

S5.3 Service brakes—road tests. The service brake system on each truck tractor shall, under the conditions of S6, meet the requirements of S5.3.1, S5.3.3, S5.3.4, and S5.3.6, when tested without adjustments other than those specified in this standard. The service brake system on each bus and truck (other than a truck tractor shall) manufactured before July 1, 2005 and each bus and truck (other than a truck tractor) manufactured in two or more stages shall, under the conditions of S6, meet the requirements of S5.3.1, S5.3.3, and S5.3.4 when tested without adjustments other than those specified in this standard. The service brake system on each bus and truck (other than a truck tractor) manufactured on or after July 1, 2005 and each bus and truck (other than a truck tractor) manufactured in two or more stages on or after July 1, 2006 shall, under the conditions of S6, meet the requirements of S5.3.1, S5.3.3, S5.3.4, and S5.3.6, when tested without adjustments other than those specified in this standard. The service brake system on each trailer shall, under the conditions of S6, meet the requirements of S5.3.3, S5.3.4, and S5.3.5 when tested without adjustments other than those specified in this standard. However, a heavy hauler trailer and the truck and trailer portions of an auto transporter need not met the requirements of S5.3.

S5.3.1 *Stopping distance—trucks and buses*. When stopped six times for each combination of vehicle type, weight, and speed specified in S5.3.1.1, in the sequence specified in Table I, each truck tractor manufactured on or after March 1, 1997, and each single unit vehicle manufactured on or after March 1, 1998, shall stop at least once in not more than the distance specified in Table II, measured from the point at which movement of the service brake control begins, without any part of the vehicle leaving the roadway, and with wheel lockup permitted only as follows:

(a) At vehicle speeds above 20 mph, any wheel on a nonsteerable axle other than the two rearmost nonliftable, nonsteerable axles may lock up, for any duration. The wheels on the two rearmost nonliftable, nonsteerable axles may lock up according to S5.3.1(b).

(b) At vehicle speeds above 20 mph, one wheel on any axle or two wheels on any tandem may lock up for any duration.

(c) At vehicle speeds above 20 mph, any wheel not permitted to lock in S5.3.1 (a) or (b) may lock up repeatedly, with each lockup occurring for a duration of one second or less.

(d) At vehicle speeds of 20 mph or less, any wheel may lock up for any duration.

S5.3.1.1 Stop the vehicle from 60 mph on a surface with a peak friction coefficient of 0.9 with the vehicle loaded as follows:

(a) Loaded to its GVWR so that the load on each axle, measured at the tire-ground interface, is most nearly proportional to the axles' respective GAWRs, without exceeding the GAWR of any axle.

(b) In the truck tractor only configuration plus up to 500 lbs. or, at the manufacturer's option, at its unloaded weight plus up to 500 lbs. (including driver and instrumentation) and plus not more than an additional 1,000 lbs. for a roll bar structure on the vehicle, and

(c) At its unloaded vehicle weight (except for truck tractors) plus up to 500 lbs. (including driver and instrumentation) or, at the manufacturer's option, at its unloaded weight plus up to 500 lbs. (including driver and instrumentation) plus not more than an additional 1,000 lbs. for a roll bar structure on the vehicle. If the speed attainable in two miles is less than 60 mph, the vehicle shall stop from a speed in Table II that is four to eight mph less than the speed attainable in two miles.

S5.3.2 [Reserved]

S5.3.3 *Brake actuation time*. Each service brake system shall meet the requirements of S5.3.3.1 (a) and (b).

S5.3.3.1(a) With an initial service reservoir system air pressure of 100 psi, the air pressure in each brake chamber shall, when measured from the first movement of the service brake control, reach 60 psi in not more than 0.45 second in the case of trucks and buses, 0.50 second in the case of trailers, other than trailer converter dollies, designed to tow another vehicle equipped with air brakes, 0.55 second in the case of trailer converter dollies, and 0.60 second in the case of trailers other than trailers designed to tow another vehicle equipped with air brakes. A vehicle designed to tow another vehicle equipped with air brakes shall meet the above actuation time requirement with a 50-cubic-inch test reservoir connected to the control line output coupling. A trailer, including a trailer converter dolly, shall meet the above actuation time requirement with its control line input coupling connected to the test rig shown in Figure 1.

(b) For a vehicle that is designed to tow another vehicle equipped with air brakes, the pressure in the 50-cubic-inch test reservoir referred to in S5.3.3.1(a) shall, when measured from the first movement of the service brake control, reach 60 psi not later than the time the fastest brake chamber on the vehicle reaches 60 psi or, at the option of the manufacturer, in not more than 0.35 second in the case of trucks and buses, 0.55 second in the case of trailer converter dollies, and 0.50 second in the case of trailers other than trailer converter dollies.

S5.3.4 *Brake release time.* Each service brake system shall meet the requirements of S5.3.4.1 (a) and (b).

S5.3.4.1(a) With an initial service brake chamber air pressure of 95 psi, the air pressure in each brake chamber shall, when measured from the first movement of the service brake control, fall to 5 psi in not more than 0.55 second in the case of trucks and buses; 1.00 second in the case of trailers, other than trailer converter dollies, designed to tow another vehicle equipped with air brakes; 1.10 seconds in the case of trailer converter dollies; and 1.20 seconds in the case of trailers other than trailers designed to tow another vehicle equipped with air brakes. A vehicle designated to tow another vehicle equipped with air brakes shall meet the above release time requirement with a 50-cubic-inch test reservoir connected to the control line output coupling. A trailer, including a trailer converter dolly, shall meet the above release time requirement with its control line input coupling connected to the test rig shown in Figure 1.

(b) For vehicles designed to tow another vehicle equipped with air brakes, the pressure in the 50-cubic-inch test reservoir referred to in S5.3.4.1(a) shall, when measured from the first movement of the service brake control, fall to 5 psi in not more than 0.75 seconds in the case of trucks and buses, 1.10 seconds in the case of trailer converter dollies, and 1.00 seconds in the case of trailers other than trailer converter dollies.

S5.3.5 *Control signal pressure differential—converter dollies and trailers designed to tow another vehicle equipped with air brakes.*

(a) For a trailer designed to tow another vehicle equipped with air brakes, the pressure differential between the control line input coupling and a 50-cubic-inch test reservoir attached to the control line output coupling shall not exceed the values specified in S5.3.5(a) (1), (2), and (3) under the conditions specified in S5.3.5(b) (1) through (4):

(1) 1 psi at all input pressures equal to or greater than 5 psi, but not greater than 20 psi;

(2) 2 psi at all input pressures equal to or greater than 20 psi but not greater than 40 psi; and

(3) Not more than a 5-percent differential at any input pressure equal to or greater than 40 psi.

(b) The requirements in S5.3.5(a) shall be met—

(1) When the pressure at the input coupling is steady, increasing or decreasing;

(2) When air is applied to or released from the control line input coupling using the trailer test rig shown in Figure 1;

(3) With a fixed orifice consisting of a 0.0180 inch diameter hole (no. 77 drill bit) in a 0.032 inch thick disc installed in the control line between the trailer test rig coupling and the vehicle's control line input coupling; and

(4) Operating the trailer test rig in the same manner and under the same conditions as it is operated during testing to measure brake actuation and release times, as specified in S5.3.3 and S5.3.4, except for the installation of the orifice in the control line to restrict airflow rate.

S5.3.6 Stability and control during braking—trucks and buses. When stopped four consecutive times for each combination of weight, speed, and road conditions specified in S5.3.6.1 and S5.3.6.2, each truck tractor shall stop at least three times within the 12-foot lane, without any part of the vehicle leaving the roadway. When stopped four consecutive times for each combination of weight, speed, and road conditions specified in S5.3.6.1 and S5.3.6.2, each bus and truck (other than a truck tractor) manufactured on or after July 1, 2005, and each bus and truck (other than a truck tractor) manufactured in two or more stages on or after July 1, 2006, shall stop at least three times within the 12-foot lane, without any part of the vehicle leaving the roadway.

S5.3.6.1 Using a full-treadle brake application for the duration of the stop, stop the vehicle from 30 mph or 75 percent of the maximum drive-through speed, whichever is less, on a 500-foot radius curved roadway with a wet level surface having a peak friction coefficient of 0.5 when measured on a straight or curved section of the curved roadway using an American Society for Testing and Materials (ASTM) E1136 standard reference tire, in accordance with ASTM Method E1337–90, at a speed of 40 mph, with water delivery.

S5.3.6.2 Stop the vehicle, with the vehicle:

(a) Loaded to its GVWR, for a truck tractor, and

(b) At its unloaded weight plus up to 500 pounds (including driver and instrumentation), or at the manufacturer's option, at its unloaded weight plus up to 500 pounds (including driver and instrumentation) and plus not more than an additional 1000 pounds for a roll bar structure on the vehicle, for a truck, bus, or truck tractor.

S5.4 *Service brake system—dynamometer tests.* When tested without prior road testing, under the conditions of S6.2, each brake assembly shall meet the requirements of S5.4.1, S5.4.2, and S5.4.3 when tested in sequence and without adjustments other than those specified in the standard. For purposes of the requirements of S5.4.2 and S5.4.3, an average deceleration rate is the change in velocity divided by the deceleration time measured from the onset of deceleration.

S5.4.1 *Brake retardation force.* The sum of the retardation forces exerted by the brakes on each vehicle designed to be towed by another vehicle equipped with air brakes shall be such that the quotient sum of the brake retardation forces / sum of GAWR's relative to brake chamber air pressure, and shall have values not less than those shown in Column 1 of Table III. Retardation force shall be determined as follows:

S5.4.1.1 After burnishing the brake pursuant to S6.2.6, retain the brake assembly on the inertia dynamometer. With an initial brake temperature between 125 °F. and 200 °F., conduct a stop from 50 m.p.h., maintaining brake chamber air pressure at a constant 20 psi. Measure the average torque exerted by the brake from the time the specified air pressure is reached until the brake stops and divide by the static loaded tire radius specified by the tire manufacturer to determine the retardation force. Repeat the procedure six times, increasing the brake chamber air pressure by 10 psi each time. After each stop, rotate the brake drum or disc until the temperature of the brake falls to between 125 °F. and 200 °F.

S5.4.2 *Brake power.* When mounted on an inertia dynamometer, each brake shall be capable of making 10 consecutive decelerations at an average rate of 9 f.p.s.p.s. from 50 m.p.h. to 15 m.p.h., at equal intervals of 72 seconds, and shall be capable of decelerating to a stop from 20 m.p.h. at an average deceleration rate of 14 f.p.s.p.s. 1 minute after the 10th deceleration. The series of decelerations shall be conducted as follows:

S5.4.2.1 With an initial brake temperature between 150 °F. and 200 °F. for the first brake application, and the drum or disc rotating at a speed equivalent to 50 m.p.h., apply the brake and decelerate at an average deceleration

rate of 9 f.p.s.p.s. to 15 m.p.h. Upon reaching 15 m.p.h., accelerate to 50 m.p.h. and apply the brake for a second time 72 seconds after the start of the first application. Repeat the cycle until 10 decelerations have been made. The service line air pressure shall not exceed 100 psi during any deceleration.

S5.4.2.2 One minute after the end of the last deceleration required by S5.4.2.1 and with the drum or disc rotating at a speed of 20 m.p.h., decelerate to a stop at an average deceleration rate of 14 f.p.s.p.s.

S5.4.3 *Brake recovery*. Except as provided in S5.4.3(a) and (b), starting two minutes after completing the tests required by S5.4.2, a vehicle's brake shall be capable of making 20 consecutive stops from 30 mph at an average deceleration rate of 12 f.p.s.p.s., at equal intervals of one minute measured from the start of each brake application. The service line air pressure needed to attain a rate of 12 f.p.s.p.s. shall be not more than 85 lb/in^2, and not less than 20lb/in^2 for a brake not subject to the control of an antilock system, or 12 lb/in^2 for a brake subject to the control of an antilock system.

(a) Notwithstanding S5.4.3, neither front axle brake of a truck-tractor is subject to the requirements set forth in S5.4.3.

(b) Notwithstanding S5.4.3, neither front axle brake of a bus or a truck other than a truck-tractor is subject to the requirement set forth in S5.4.3 prohibiting the service line air pressure from being less than 20 lb/in^2 for a brake not subject to the control of an antilock system or 12 lb/in^2 for a brake subject to the control of an antilock system.

S5.5 *Antilock system.*

S5.5.1 *Antilock system malfunction.* On a truck tractor manufactured on or after March 1, 1997, that is equipped with an antilock brake system and a single unit vehicle manufactured on or after March 1, 1998, that is equipped with an antilock brake system, a malfunction that affects the generation or transmission of response or control signals of any part of the antilock system shall not increase the actuation and release times of the service brakes.

S5.5.2 *Antilock system power—trailers.* On a trailer (including a trailer converter dolly) manufactured on or after March 1, 1998, that is equipped with an antilock system that requires electrical power for operation, the power shall be obtained from the towing vehicle through one or more electrical circuits which provide continuous power whenever the powered vehicle's ignition (start) switch is in the ''on'' (''run'') position. The antilock system shall automatically receive power from the stoplamp circuit, if the primary circuit or circuits are not functioning. Each trailer (including a trailer converter dolly) manufactured on or after March 1, 1998, that is equipped to tow another air-braked vehicle shall be equipped with one or more circuits which provide continuous power to the antilock system on the vehicle(s) it tows. Such circuits shall be adequate to enable the antilock system on each towed vehicle to be fully operable.

S5.6 *Parking brakes.*

(a) Except as provided in S5.6(b) and S5.6(c), each vehicle other than a trailer converter dolly shall have a parking brake system that under the conditions of S6.1 meets the requirements of:

(1) S5.6.1 or S5.6.2, at the manufacturer's option, and

(2) S5.6.3, S5.6.4, S5.6.5, and S5.6.6.

(b) At the option of the manufacturer, for vehicles equipped with brake systems which incorporate a common diaphragm, the performance requirements specified in S5.6(a) which must be met with any single leakage-type failure in a common diaphragm may instead be met with the level of leakage-type failure determined in S5.6.7. The election of this option does not affect the performance requirements specified in S5.6(a) which apply with single leakage-type failures other than failures in a common diaphragm.

(c) At the option of the manufacturer, the trailer portion of any agricultural commodity trailer, heavy hauler trailer, or pulpwood trailer may meet the requirements of §393.43 of this title instead of the requirements of S5.6(a).

S5.6.1 *Static retardation force.* With all other brakes made inoperative, during a static drawbar pull in a forward or rearward direction, the static retardation force produced by the application of the parking brakes shall be:

(a) In the case of a vehicle other than a truck-tractor that is equipped with more than two axles, such that the quotient static retardation force/GAWR is not less than 0.28 for any axle other than a steerable front axle; and

(b) In the case of a truck-tractor that is equipped with more than two axles, such that the quotient static retardation force/GVWR is not less than 0.14.

S5.6.2 *Grade holding.* With all parking brakes applied, the vehicle shall remain stationary facing uphill and facing downhill on a smooth, dry portland cement concrete roadway with a 20-percent grade, both

(a) When loaded to its GVWR, and

(b) At its unloaded vehicle weight plus 1500 pounds (including driver and instrumentation and roll bar).

S5.6.3 *Application and holding.* Each parking brake system shall meet the requirements of S5.6.3.1 through S5.6.3.4.

S5.6.3.1 The parking brake system shall be capable of achieving the minimum performance specified either in S5.6.1 or S5.6.2 with any single leakage-type failure, in any other brake system, of a part designed to contain compressed air or brake fluid (excluding failure of a component of a brake chamber housing but including failure of any brake chamber diaphragm that is part of any other brake system including a diaphragm which is common to the parking brake system and any other brake system), when the pressures in the vehicle's parking brake chambers are at the levels determined in S5.6.3.4.

S5.6.3.2 A mechanical means shall be provided that, after a parking brake application is made with the pressures in the vehicle's parking brake chambers at the levels determined in S5.6.3.4, and all air and fluid pressures in the vehicle's braking systems are then bled down to zero, and without using electrical power, holds the parking brake application with sufficient parking retardation force to meet the minimum performance specified in S5.6.3.1 and in either S5.6.1 or S5.6.2.

S5.6.3.3 For trucks and buses, with an initial reservoir system pressure of 100 psi and, if designed to tow a vehicle equipped with air brakes, with a 50 cubic inch test reservoir connected to the supply line coupling, no later than three seconds from the time of actuation of the parking brake control, the mechanical means referred to in S5.6.3.2 shall be actuated. For trailers, with the supply line initially pressurized to 100 psi using the supply line portion of the trailer test rig (Figure 1) and, if designed to tow a vehicle equipped with air brakes, with a 50 cubic inch test reservoir connected to the rear supply line coupling, no later than three seconds from the time venting to the atmosphere of the front supply line coupling is initiated, the mechanical means referred to in S5.6.3.2 shall be actuated. This requirement shall be met for trucks, buses and trailers both with and without any single leakage-type failure, in any other brake system, of a part designed to contain compressed air or brake fluid (consistent with the parenthetical phrase specified in S5.6.3.1).

S5.6.3.4 The parking brake chamber pressures for S5.6.3.1 and S5.6.3.2 are determined as follows. For trucks and buses, with an initial reservoir system pressure of 100 psi and, if designed to tow a vehicle equipped with air brakes, with a 50 cubic inch test reservoir connected to the supply line coupling, any single leakage type failure, in any other brake system, of a part designed to contain compressed air or brake fluid (consistent with the parenthetical phrase specified in S5.6.3.1), is introduced in the brake system. The parking brake control is actuated and the pressures in the vehicle's parking brake chambers are measured three seconds after that actuation is initiated. For trailers, with the supply line initially pressurized to 100 psi using the supply line portion of the trailer test rig (Figure 1) and, if designed to tow a vehicle equipped with air brakes, with a 50 cubic inch test reservoir connected to the rear supply line coupling, any single leakage type failure, in any other brake system, of a part designed to contain compressed air or brake fluid (consistent with the parenthetical phrase specified in S5.6.3.1), is introduced in the brake system. The front supply line coupling is vented to the atmosphere and the pressures in the vehicle's parking brake chambers are

measured three seconds after that venting is initiated.

S5.6.4 *Parking brake control—trucks and buses.* The parking brake control shall be separate from the service brake control. It shall be operable by a person seated in the normal driving position. The control shall be identified in a manner that specifies the method of control operation. The parking brake control shall control the parking brakes of the vehicle and of any air braked vehicle that it is designed to tow.

S5.6.5 *Release Performance.* Each parking brake system shall meet the requirements specified in S5.6.5.1 through S5.6.5.4.

S5.6.5.1 For trucks and buses, with initial conditions as specified in S5.6.5.2, at all times after an application actuation of the parking brake control, and with any subsequent level of pressure, or combination of levels of pressure, in the reservoirs of any of the vehicle's brake systems, no reduction in parking brake retardation force shall result from a release actuation of the parking brake control unless the parking brakes are capable, after such release, of being reapplied at a level meeting the minimum performance specified either in S5.6.1 or S5.6.2. This requirement shall be met both with and without the engine on, and with and without single leakage-type failure, in any other brake system, of a part designed to contain compressed air or brake fluid (consistent with the parenthetical phrase specified in S5.6.3.1).

S5.6.5.2 The initial conditions for S5.6.5.1 are as follows: The reservoir system pressure is 100 psi. If the vehicle is designed to tow a vehicle equipped with air brakes, a 50 cubic inch test reservoir is connected to the supply line coupling.

S5.6.5.3 For trailers, with initial conditions as specified in S5.6.5.4, at all times after actuation of the parking brakes by venting the front supply line coupling to the atmosphere, and with any subsequent level of pressure, or combination of levels of pressure, in the reservoirs of any of the vehicle's brake systems, the parking brakes shall not be releasable by repressurizing the supply line using the supply line portion of the trailer test rig (Figure 1) to any pressure above 70 psi, unless the parking brakes are capable, after such release, of reapplication by subsequent venting of the front supply line coupling to the atmosphere, at a level meeting the minimum performance specified either in S5.6.1 or S5.6.2. This requirement shall be met both with and without any single leakage-type failure, in any other brake system, of a part designed to contain compressed air or brake fluid (consistent with the parenthetical phrase specified in S5.6.3.1).

S5.6.5.4 The initial conditions for S5.6.5.3 are as follows: The reservoir system and supply line are pressurized to 100 psi, using the supply line portion of the trailer test rig (Figure 1). If the vehicle is designed to tow a vehicle equipped with air brakes, a 50 cubic inch test reservoir is connected to the rear supply line coupling.

S5.6.6 *Accumulation of actuation energy.* Each parking brake system shall meet the requirements specified in S5.6.6.1 through S5.6.6.6.

S5.6.6.1 For trucks and buses, with initial conditions as specified in S5.6.6.2, the parking brake system shall be capable of meeting the minimum performance specified either in S5.6.1 or S5.6.2, with any single leakage-type failure, in any other brake system, of a part designed to contain compressed air or brake fluid (consistent with the parenthetical phrase specified in S5.6.3.1) at the conclusion of the test sequence specified in S5.6.6.3.

S5.6.6.2 The initial conditions for S5.6.6.1 are as follows: The engine is on. The reservoir system pressure is 100 psi. If the vehicle is designed to tow a vehicle equipped with air brakes, a 50 cubic inch test reservoir is connected to the supply line coupling.

S5.6.6.3 The test sequence for S5.6.6.1 is as follows: The engine is turned off. Any single leakage type failure, in any other brake system, of a part designed to contain compressed air or brake fluid (consistent with the parenthetical phrase specified in S5.6.3.1), is then introduced in the brake system. An application actuation of the parking brake control is then made. Thirty seconds after such actuation, a release actuation of the

parking brake control is made. Thirty seconds after the release actuation, a final application actuation of the parking brake control is made.

S5.6.6.4 For trailers, with initial conditions as specified in S5.6.6.5, the parking brake system shall be capable of meeting the minimum performance specified either in S5.6.1 or S5.6.2, with any single leakage-type failure, in any other brake system, of a part designed to contain compressed air or brake fluid (consistent with the parenthetical phrase specified in S5.6.3.1), at the conclusion of the test sequence specified in S5.6.6.6.

S5.6.6.5 The initial conditions for S5.6.6.4 are as follows: The reservoir system and supply line are pressurized to 100 psi, using the supply line portion of the trailer test rig (Figure 1). If the vehicle is designed to tow a vehicle equipped with air brakes, a 50 cubic inch test reservoir is connected to the rear supply line coupling.

S5.6.6.6 The test sequence for S5.6.6.4 is as follows. Any single leakage type failure, in any other brake system, of a part designed to contain compressed air or brake fluid (consistent with the parenthetical phrase specified in S5.6.3.1), is introduced in the brake system. The front supply line coupling is vented to the atmosphere. Thirty seconds after the initiation of such venting, the supply line is repressurized with the trailer test rig (Figure 1). Thirty seconds after the initiation of such repressurizing of the supply line, the front supply line is vented to the atmosphere. This procedure is conducted either by connection and disconnection of the supply line coupling or by use of a valve installed in the supply line portion of the trailer test rig near the supply line coupling.

S5.6.7 *Maximum level of common diaphragm leakage-type failure/ Equivalent level of leakage from the air chamber containing that diaphragm.* In the case of vehicles for which the option in S5.6(b) has been elected, determine the maximum level of common diaphragm leakage-type failure (or equivalent level of leakage from the air chamber containing that diaphragm) according to the procedures set forth in S5.6.7.1 through S5.6.7.2.3.

S5.6.7.1 *Trucks and buses.*

S5.6.7.1.1 According to the following procedure, determine the threshold level of common diaphragm leakage-type failure (or equivalent level of leakage from the air chamber containing that diaphragm) at which the vehicle's parking brakes become unreleasable. With an initial reservoir system pressure of 100 psi, the engine turned off, no application of any of the vehicle's brakes, and, if the vehicle is designed to tow a vehicle equipped with air brakes, a 50 cubic inch test reservoir connected to the supply line coupling, introduce a leakage-type failure of the common diaphragm (or equivalent leakage from the air chamber containing that diaphragm). Apply the parking brakes by making an application actuation of the parking brake control. Reduce the pressures in all of the vehicle's reservoirs to zero, turn on the engine and allow it to idle, and allow the pressures in the vehicle's reservoirs to rise until they stabilize or until the compressor shut-off point is reached. At that time, make a release actuation of the parking brake control, and determine whether all of the mechanical means referred to in S5.6.3.2 continue to be actuated and hold the parking brake applications with sufficient parking retardation force to meet the minimum performance specified in either S5.6.1 or S5.6.2. Repeat this procedure with progressively decreasing or increasing levels (whichever is applicable) of leakage-type diaphragm failures or equivalent leakages, to determine the minimum level of common diaphragm leakage-type failure (or equivalent level of leakage from the air chamber containing that diaphragm) at which all of the mechanical means referred to in S5.6.3.2 continue to be actuated and hold the parking brake applications with sufficient parking retardation forces to meet the minimum performance specified in either S5.6.1 or S5.6.2.

S5.6.7.1.2 At the level of common diaphragm leakage-type failure (or equivalent level of leakage from the air chamber containing that diaphragm) determined in S5.6.7.1.1, and using the following procedure, determine the threshold maximum reservoir rate (in psi per minute). With an initial reservoir system pressure of 100 psi, the

engine turned off, no application of any of the vehicle's brakes and, if the vehicle is designed to tow a vehicle equipped with air brakes, a 50 cubic inch test reservoir connected to the supply line coupling, make an application actuation of the parking brake control. Determine the maximum reservoir leakage rate (in psi per minute), which is the maximum rate of decrease in air pressure of any of the vehicle's reservoirs that results after that parking brake application.

S5.6.7.1.3 Using the following procedure, introduce a leakage-type failure of the common diaphragm (or equivalent leakage from the air chamber containing that diaphragm) that results in a maximum reservoir leakage rate that is three times the threshold maximum reservoir leakage rate determined in S5.6.7.1.2. With an initial reservoir system pressure of 100 psi, the engine turned off, no application of any of the vehicle's brakes and, if the vehicle is designed to tow a vehicle equipped with air brakes, a 50 cubic inch test reservoir connected to the supply line coupling, make an application actuation of the parking brake control. Determine the maximum reservoir leakage rate (in psi per minute), which is the maximum rate of decrease in air pressure of any of the vehicle's reservoirs that results after that parking brake application. The level of common diaphragm leakage-type failure (or equivalent level of leakage from the air chamber containing that diaphragm) associated with this reservoir leakage rate is the level that is to be used under the option set forth in S5.6(b).

S5.6.7.2 *Trailers.*

S5.6.7.2.1 According to the following procedure, determine the threshold level of common diaphragm leakage-type failure (or equivalent level of leakage from the air chamber containing that diaphragm) at which the vehicle's parking brakes become unreleasable. With an initial reservoir system and supply line pressure of 100 psi, no application of any of the vehicle's brakes, and, if the vehicle is designed to tow a vehicle equipped with air brakes, a 50 cubic inch test reservoir connected to the supply line coupling, introduce a leakage-type failure of the common diaphragm (or equivalent leakage from the air chamber containing that diaphragm). Make a parking brake application by venting the front supply line coupling to the atmosphere, and reduce the pressures in all of the vehicle's reservoirs to zero. Pressurize the supply line by connecting the trailer's front supply line coupling to the supply line portion of the trailer test rig (Figure 1) with the regulator of the trailer test rig set at 100 psi, and determine whether all of the mechanical means referred to in S5.6.3.2 continue to be actuated and hold the parking brake applications with sufficient parking retardation forces to meet the minimum performance specified in either S5.6.1 or S5.6.2. Repeat this procedure with progressively decreasing or increasing levels (whichever is applicable) of leakage-type diaphragm failures or equivalent leakages, to determine the minimum level of common diaphragm leakage-type failure (or equivalent level of leakage from the air chamber containing that diaphragm) at which all of the mechanical means referred to in S5.6.3.2 continue to be actuated and hold the parking brake applications with sufficient parking retardation forces to meet the minimum performance specified in either S5.6.1 or S5.6.2.

S5.6.7.2.2 At the level of common diaphragm leakage-type failure (or equivalent level of leakage from the air chamber containing that diaphragm) determined in S5.6.7.2.1, and using the following procedure, determine the threshold maximum reservoir leakage rate (in psi per minute). With an initial reservoir system and supply line pressure of 100 psi, no application of any of the vehicle's brakes and, if the vehicle is designed to tow a vehicle equipped with air brakes, a 50 cubic inch test reservoir connected to the rear supply line coupling, make a parking brake application by venting the front supply line coupling to the atmosphere. Determine the maximum reservoir leakage rate (in psi per minute), which is the maximum rate of decrease in air pressure of any of the vehicle's reservoirs that results after that parking brake application.

S5.6.7.2.3 Using the following procedure, a leakage-type failure of the common diaphragm (or equivalent leakage from the air chamber containing that diaphragm) that results in a maximum reservoir leakage rate that is three times the threshold maximum reservoir leakage rate determined in S5.6.7.2.2. With an initial reservoir system and supply line pressure of 100 psi, no application of any of the vehicle's brakes and, if the vehicle is designed to tow a vehicle equipped with air brakes, a 50 cubic inch test reservoir connected to the rear supply line coupling, make a parking brake application by venting the front supply line coupling to the atmosphere. Determine the maximum reservoir leakage rate (in psi per minute), which is the maximum rate of decrease in air pressure of any of the vehicle's reservoirs that results after that parking brake application. The level of common diaphragm leakage-type failure (or equivalent level of leakage from the air chamber containing that diaphragm) associated with this reservoir leakage rate is the level that is to be used under the option set forth in S5.6(b).

S5.7 *Emergency brake system for trucks and buses.* Each vehicle shall be equipped with an emergency brake system which, under the conditions of S6.1, conforms to the requirements of S5.7.1 through S5.7.3. However, the truck portion of an auto transporter need not meet the road test requirements of S5.7.1 and S5.7.3.

S5.7.1 *Emergency brake system performance.* When stopped six times for each combination of weight and speed specified in S5.3.1.1, except for a loaded truck tractor with an unbraked control trailer, on a road surface having a PFC of 0.9, with a single failure in the service brake system of a part designed to contain compressed air or brake fluid (except failure of a common valve, manifold, brake fluid housing, or brake chamber housing), the vehicle shall stop at least once in not more than the distance specified in Column 5 of Table II, measured from the point at which movement of the service brake control begins, except that a truck-tractor tested at its unloaded vehicle weight plus up to 1500 pounds shall stop at least once in not more than the distance specified in Column 6 of Table II. The stop shall be made without any part of the vehicle leaving the roadway, and with unlimited wheel lockup permitted at any speed.

S5.7.2 *Emergency brake system operation.* The emergency brake system shall be applied and released, and be capable of modulation, by means of the service brake control.

S5.7.3 *Towing vehicle emergency brake requirements.* In addition to meeting the other requirements of S5.7, a vehicle designed to tow another vehicle equipped with air brakes shall—

(a) In the case of a truck-tractor in the unloaded condition and a single unit truck which is capable of towing an airbrake equipped vehicle and is loaded to GVWR, be capable of meeting the requirements of S5.7.1 by operation of the service brake control only, with the trailer air supply line and air control line from the towing vehicle vented to the atmosphere in accordance with S6.1.14;

(b) Be capable of modulating the air in the supply or control line to the trailer by means of the service brake control with a single failure in the towing vehicle service brake system as specified in S5.7.1.

(c) [Reserved]

S5.8 *Emergency brakes for trailers.* Each trailer shall meet the requirements of S5.8.1 through S5.8.3.

S5.8.1 *Emergency braking capability.* Each trailer other than a trailer converter dolly shall have a parking brake system that conforms to S5.6 and that applies with the force specified in S5.6.1 or S5.6.2 when the air pressure in the supply line is at atmospheric pressure. A trailer converter dolly shall have, at the manufacturer's option—

(a) A parking brake system that conforms to S5.6 and that applies with the force specified in S5.6.1 or S5.6.2 when the air pressure in the supply line is at atmospheric pressure, or

(b) An emergency system that automatically applies the service brakes when the service reservoir is at any pressure above 20 lb/in^2 and the supply line is at atmospheric pressure. However, any agricultural commodity trailer, heavy hauler trailer, or pulpwood trailer shall meet the requirements of S5.8.1 or, at the option of the

manufacturer, the requirements of §393.43 of this title.

S5.8.2 *Supply line pressure retention.* Any single leakage type failure in the service brake system (except for a failure of the supply line, a valve directly connected to the supply line or a component of a brake chamber housing) shall not result in the pressure in the supply line falling below 70 psi, measured at the forward trailer supply coupling. A trailer shall meet the above supply line pressure retention requirement with its brake system connected to the trailer test rig shown in Figure 1, with the reservoirs of the trailer and test rig initially pressurized to 100 psi and the regulator of the trailer test rig set at 100 psi; except that a trailer equipped with an air-applied, mechanically-held parking brake system and not designed to tow a vehicle equipped with air brakes, at the manufacturer's option, may meet the requirements of S5.8.4 rather than those of S5.8.2 and S5.8.3.

S5.8.3 *Automatic application of parking brakes.* With an initial reservoir system pressure of 100 psi and initial supply line pressure of 100 psi, and if designed to tow a vehicle equipped with air brakes, with a 50 cubic inch test reservoir connected to the rear supply line coupling, and with any subsequent single leakage type failure in any other brake system, of a part designed to contain compressed air or brake fluid (consistent with the parenthetical phrase specified in S5.6.3.1), whenever the air pressure in the supply line is 70 psi or higher, the parking brakes shall not provide any brake retardation as a result of complete or partial automatic application of the parking brakes.

S5.8.4 *Automatic application of air-applied, mechanically held parking brakes.* With its brake system connected to the supply line portion of the trailer test rig (Figure 1) and the regulator of the trailer test rig set at 100 psi, and with any single leakage type failure in the service brake system (except for a failure of the supply line, a valve directly connected to the supply line or a component of a brake chamber, but including failure of any common diaphragm), the parking brakes shall not provide any brake retardation as a result of complete or partial automatic application of the parking brakes.

S5.9 *Final inspection.* Inspect the service brake system for the condition of adjustment and for the brake indicator display in accordance with S5.1.8 and S5.2.2.

S6. *Conditions.* The requirements of S5 shall be met by a vehicle when it is tested according to the conditions set in this S6, without replacing any brake system part or making any adjustments to the brake system except as specified. Unless otherwise specified, where a range of conditions is specified, the vehicle must be capable of meeting the requirements at all points within the range. On vehicles equipped with automatic brake adjusters, the automatic brake adjusters must remain activated at all times. Compliance of vehicles manufactured in two or more stages may, at the option of the final-stage manufacturer, be demonstrated to comply with this standard by adherence to the instructions of the incomplete vehicle manufacturer provided with the vehicle in accordance with §568.4(a)(7)(ii) and §568.5 of title 49 of the Code of Federal Regulations.

S6.1 *Road test conditions.*

S6.1.1 Except as otherwise specified, the vehicle is loaded to its GVWR, distributed proportionally to its GAWRs. During the burnish procedure specified in S6.1.8, truck tractors shall be loaded to their GVWR, by coupling them to an unbraked flatbed semitrailer, which semitrailer shall be loaded so that the weight of the tractor-trailer combination equals the GVWR of the truck tractor. The load on the unbraked flatbed semitrailer shall be located so that the truck tractor's wheels do not lock during burnish.

S6.1.2 The inflation pressure is as specified by the vehicle manufacturer for the GVWR.

S6.1.3 Unless otherwise specified, the transmission selector control is in neutral or the clutch is disengaged during all decelerations and during static parking brake tests.

S6.1.4 All vehicle openings (doors, windows, hood, trunk, cargo doors, etc.) are in a closed position except as required for instrumentation purposes.

S6.1.5 The ambient temperature is between 32 °F. and 100 °F.

S6.1.6 The wind velocity is zero.

S6.1.7 Unless otherwise specified, stopping tests are conducted on a 12-foot wide level, straight roadway having a peak friction coefficient of 0.9. For road tests in S5.3, the vehicle is aligned in the center of the roadway at the beginning of a stop. Peak friction coefficient is measured using an ASTM E1136 standard reference test tire in accordance with ASTM method E1337–90, at a speed of 40 mph, without water delivery for the surface with PFC of 0.9, and with water delivery for the surface with PFC of 0.5.

S6.1.8 For vehicles with parking brake systems not utilizing the service brake friction elements, burnish the friction elements of such systems prior to the parking brake test according to the manufacturer's recommendations. For vehicles with parking brake systems utilizing the service brake friction elements, burnish the brakes as follows: With the transmission in the highest gear appropriate for a speed of 40 mph, make 500 snubs between 40 mph and 20 mph at a deceleration rate of 10 f.p.s.p.s., or at the vehicle's maximum deceleration rate if less than 10 f.p.s.p.s. Except where an adjustment is specified, after each brake application accelerate to 40 mph and maintain that speed until making the next brake application at a point 1 mile from the initial point of the previous brake application. If the vehicle cannot attain a speed of 40 mph in 1 mile, continue to accelerate until the vehicle reaches 40 mph or until the vehicle has traveled 1.5 miles from the initial point of the previous brake application, whichever occurs first. Any automatic pressure limiting valve is in use to limit pressure as designed. The brakes may be adjusted up to three times during the burnish procedure, at intervals specified by the vehicle manufacturer, and may be adjusted at the conclusion of the burnishing, in accordance with the vehicle manufacturer's recommendation.

S6.1.9 Static parking brake tests for a semitrailer are conducted with the front-end supported by an unbraked dolly. The weight of the dolly is included as part of the trailer load.

S6.1.10 In a test other than a static parking test, a truck tractor is tested at its GVWR by coupling it to an unbraked flatbed semi-trailer (hereafter, control trailer) as specified in S6.1.10.2 to S6.1.10.4.

S6.1.10.1 [Reserved]

S6.1.10.2 The center of gravity height of the ballast on the loaded control trailer shall be less than 24 inches above the top of the tractor's fifth wheel.

S6.1.10.3 The control trailer has a single axle with a GAWR of 18,000 pounds and a length, measured from the transverse centerline of the axle to the centerline of the kingpin, of 258 ±6 inches.

S6.1.10.4 The control trailer is loaded so that its axle is loaded at 4,500 pounds and the tractor is loaded to its GVWR, loaded above the kingpin only, with the tractor's fifth wheel adjusted so that the load on each axle measured at the tire-ground interface is most nearly proportional to the axles' respective GAWRs, without exceeding the GAWR of the tractor's axle or axles or control trailer's axle.

S6.1.11 *Special drive conditions.* A vehicle equipped with an interlocking axle system or a front wheel drive system that is engaged and disengaged by the driver is tested with the system disengaged.

S6.1.12 *Liftable axles.* A vehicle with a liftable axle is tested at GVWR with the liftable axle down and at unloaded vehicle weight with the liftable axle up.

S6.1.13 *Trailer test rig.*

The trailer test rig shown in Figure 1 is calibrated in accordance with the calibration curves shown in Figure 3. For the requirements of S5.3.3.1 and S5.3.4.1, the pressure in the trailer test rig reservoir is initially set at 100 psi for actuation tests and 95 psi for release tests.

S6.1.14 In testing the emergency braking system of towing vehicles under S5.7.3(a), the hose(s) is vented to the atmosphere at any time not less than 1 second and not more than 1 minute before the emergency stop begins, while the vehicle is moving at the speed from which the stop is to be made and any manual control for the towing vehicle protection system is in the position to supply air and brake control signals to the vehicle being

towed. No brake application is made from the time the line(s) is vented until the emergency stop begins and no manual operation of the parking brake system or towing vehicle protection system occurs from the time the line(s) is vented until the stop is completed.

S6.1.15 *Initial brake temperature.* Unless otherwise specified, the initial brake temperature is not less than 150° F and not more than 200° F.

S6.1.16 *Thermocouples.*

The brake temperature is measured by plug-type thermocouples installed in the approximate center of the facing length and width of the most heavily loaded shoe or disc pad, one per brake, as shown in Figure 2. A second thermocouple may be installed at the beginning of the test sequence if the lining wear is expected to reach a point causing the first thermocouple to contact the rubbing surface of a drum or rotor. The second thermocouple shall be installed at a depth of .080 inch and located within 1 inch circumferentially of the thermocouple installed at .040 inch depth. For centergrooved shoes or pads, thermocouples are installed within one-eighth of an inch to one-quarter of an inch of the groove and as close to the center as possible.

S6.1.17 Selection of compliance options. Where manufacturer options are specified, the manufacturer shall select the option by the time it certifies the vehicle and may not thereafter select a different option for the vehicle. Each manufacturer shall, upon request from the National Highway Traffic Safety Administration, provide information regarding which of the compliance options it has selected for a particular vehicle or make/model.

S6.2 *Dynamometer test conditions.*

S6.2.1 The dynamometer inertia for each wheel is equivalent to the load on the wheel with the axle loaded to its GAWR. For a vehicle having additional GAWRs specified for operation at reduced speeds, the GAWR used is that specified for a speed of 50 mph, or, at the option of the manufacturer, any speed greater than 50 mph.

S6.2.2 The ambient temperature is between 75° F. and 100° F.

S6.2.3 Air at ambient temperature is directed uniformly and continuously over the brake drum or disc at a velocity of 2,200 feet per minute.

S6.2.4 The temperature of each brake is measured by a single plug-type thermocouple installed in the center of the lining surface of the most heavily loaded shoe or pad as shown in Figure 2. The thermocouple is outside any center groove.

S6.2.5 The rate of brake drum or disc rotation on a dynamometer corresponding to the rate of rotation on a vehicle at a given speed is calculated by assuming a tire radius equal to the static loaded radius specified by the tire manufacturer.

S6.2.6 Brakes are burnished before testing as follows: place the brake assembly on an inertia dynamometer and adjust the brake as recommended by the vehicle manufacturer. Make 200 stops from 40 mph at a deceleration of 10 f.p.s.p.s., with an initial brake temperature on each stop of not less than 315° F and not more than 385° F. Make 200 additional stops from 40 mph at a deceleration of 10 f.p.s.p.s. with an initial brake temperature on each stop of not less than 450° F and not more than 550° F. The brakes may be adjusted up to three times during the burnish procedure, at intervals specified by the vehicle manufacturer, and may be adjusted at the conclusion of the burnishing, in accordance with the vehicle manufacturer's recommendation.

S6.2.7 The brake temperature is increased to a specified level by conducting one or more stops from 40 m.p.h. at a deceleration of 10 f.p.s.p.s. The brake temperature is decreased to a specified level by rotating the drum or disc at a constant 30 m.p.h.

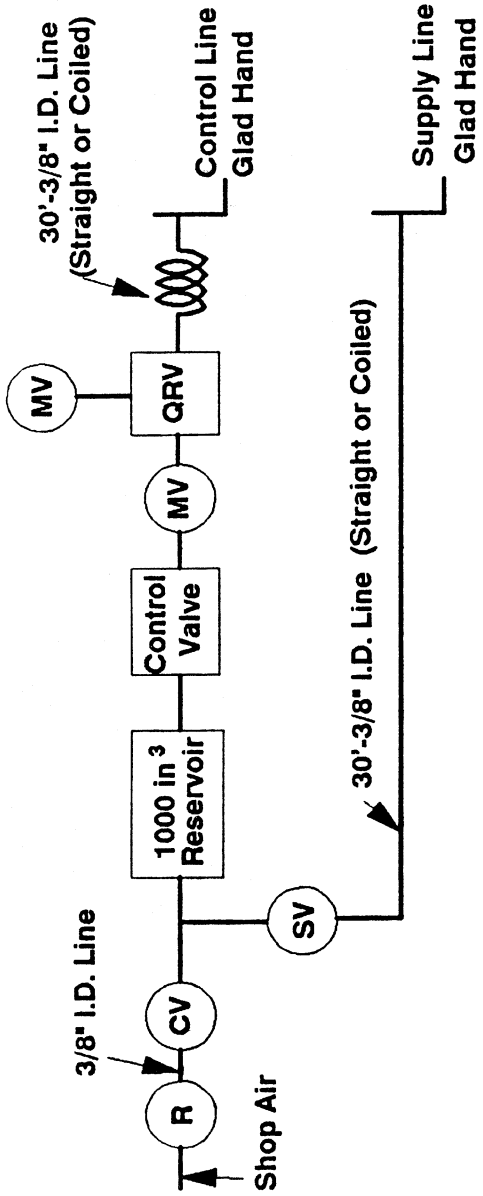

SV - Shut-off Valve
R - Regulator (set at 100 psi for service brake actuation tests; 95 psi for service brake release tests; 100 psi for parking brake tests in S5.6.3.3, S5.6.3.4, S5.6.5.4, and S5.6.6.5, and for the supply line pressure retention test in S5.8.2; and any pressure above 70 psi for parking brake test in S5.6.5.3.)
CV - Check Valve
MV - Metering Valve (Variable or Fixed)
QRV - Quick Release Valve

Figure 1. Trailer Test Rig.

FIGURE 2
THERMOCOUPLE INSTALLATION

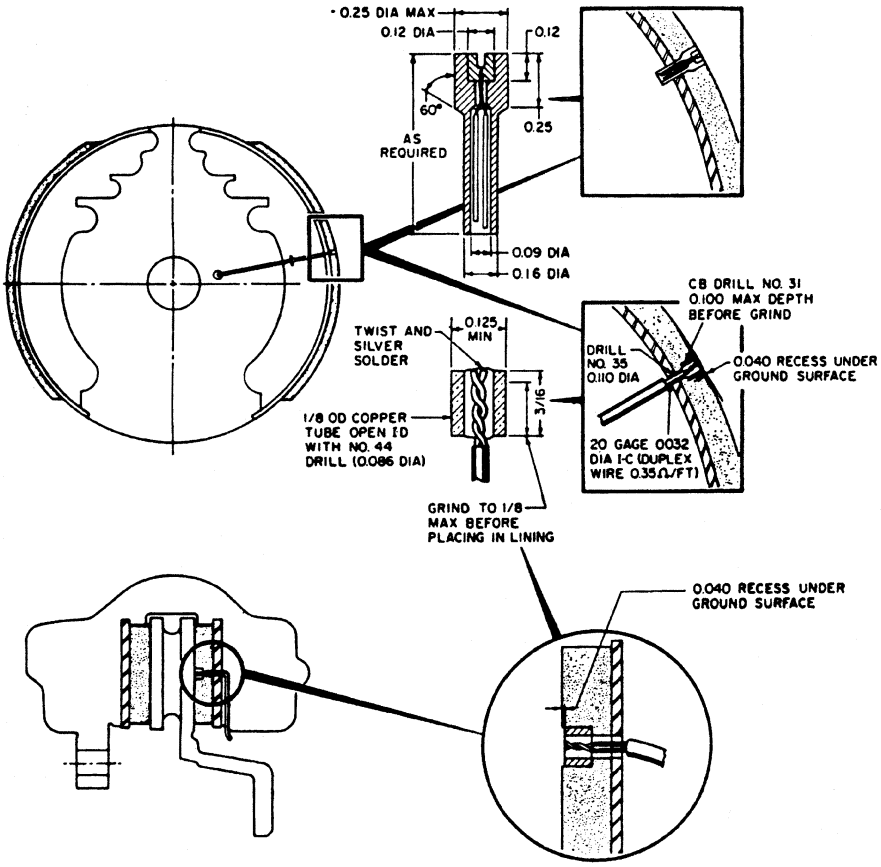

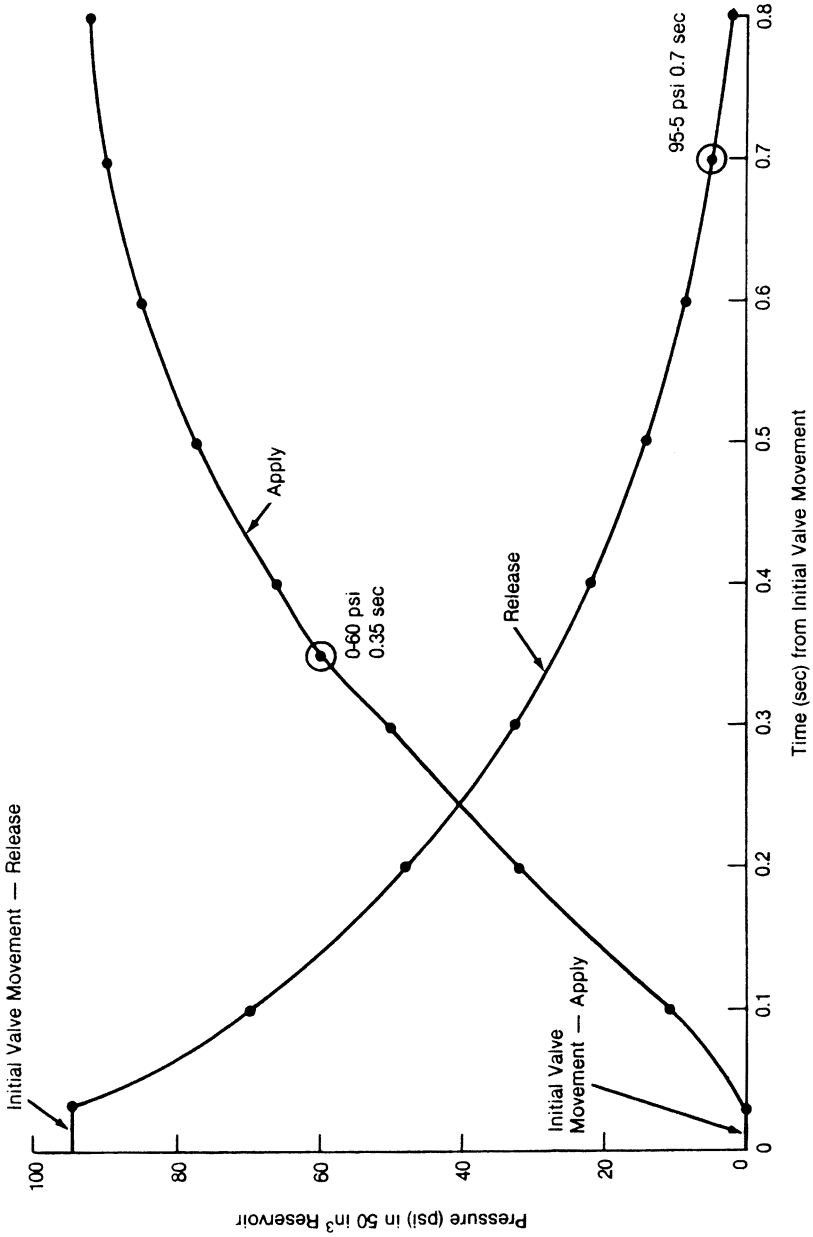

Figure 3. Pressure vs. Time for 50 in³ Test Reservoir.

TABLE I—STOPPING SEQUENCE

	Truck tractors	Single unit trucks and buses
Burnish	1	1
Stability and Control at GVWR (PFC 0.5)	2	N/A
Stability and Control at LLVW (PFC 0.5)	3	5
Manual Adjustment of Brakes	4	N/A
60 mph Service Brake Stops at GVWR (PFC 0.9)	5	2
60 mph Emergency Service Brake Stops at GVWR (PFC 0.9)	N/A	3

TABLE I—STOPPING SEQUENCE—Continued

	Truck tractors	Single unit trucks and buses
Parking Brake Test at GVWR	6	4
Manual Adjustment of Brakes	7	6
60 mph Service Brake Stops at LLVW (PFC 0.9)	8	7
60 mph Emergency Service Brake Stops at LLVW (PFC 0.9)	9	8
Parking Brake Test at LLVW	10	9
Final Inspection	11	10

TABLE II—STOPPING DISTANCE IN FEET

Vehicle speed in miles per hour	Service brake				Emergency brake	
	PFC 0.9	PFC 0.9	PFC 0.9	PFC 0.9	PFC 0.9	PFC 0.9
	(1)	(2)	(3)	(4)	(5)	(6)
20	32	35	38	40	83	85
25	49	54	59	62	123	131
30	70	78	84	89	170	186
35	96	106	114	121	225	250
40	125	138	149	158	288	325
45	158	175	189	200	358	409
50	195	216	233	247	435	504
55	236	261	281	299	520	608
60	280	310	335	355	613	720

Note: (1) Loaded and unloaded buses; (2) Loaded single unit trucks; (3) Unloaded truck tractors and single unit trucks; (4) Loaded truck tractors tested with an unbraked control trailer; (5) All vehicles except truck tractors; (6) Unloaded truck tractors.

TABLE III—BRAKE RETARDATION FORCE

Column 1 brake retardation force/GAWR	Column 2 brake chamber pressure, PSI
0.05	20
0.12	30
0.18	40
0.25	50
0.31	60
0.37	70
0.41	80

TABLE IV [RESERVED]

TABLE V—BRAKE CHAMBER RATED VOLUMES

Brake Chamber type (nominal area of piston or diaphragm in square inches)	Column 1 full stroke (inches)	Column 2 rated volume (cubic inches)
Type 9	1.75/2.10	25
Type 12	1.75/2.10	30
Type 14	2.25/2.70	40
Type 16	2.25/2.70	46
Type 18	2.25/2.70	50
Type 20	2.25/2.70	54
Type 24	2.50/3.20	67
Type 30	2.50/3.20	89
Type 36	3.00/3.60	135

[61 FR 27290, May 31, 1996, as amended at 61 FR 49695, Sept. 23, 1996; 61 FR 60636, Nov. 29, 1996; 63 FR 7727, Feb. 17, 1998; 66 FR 64158, Dec. 12, 2001; 67 FR 36820, May 28, 2002; 68 FR 47497, Aug. 11, 2003; 74 FR 9176, Mar. 3, 2009; 74 FR 42785, Aug. 25, 2009]

EFFECTIVE DATE NOTE: At 74 FR 37157, July 27, 2009, §571.121 was amended by revising S5, adding S6.1.18, revising Table II, and adding Table IIa after Table II, effective Nov. 24, 2009. For the convenience of the user, the added and revised text is set forth as follows:

§571.121 Standard No. 121; Air brake systems.

* * * * *

S5. *Requirements.* Each vehicle shall meet the following requirements under the conditions specified in S6. However, at the option of the manufacturer, the following vehicles may meet the stopping distance requirements specified in Table IIa instead of Table II: Three-axle tractors with a GVWR of 59,600 pounds or less that are manufactured before August 1, 2011; two-axle tractors that are manufactured before August 1, 2013, and

tractors with a GVWR above 59,600 pounds that are manufactured before August 1, 2013.

* * * * *

S6.1.18 *Fuel tank loading.*

The fuel tank(s) is (are) filled to 100 percent of rated capacity at the beginning of testing and is (are) not less than 75 percent of rated capacity during any part of the testing.

* * * * *

TABLE II—STOPPING DISTANCE IN FEET

Vehicle speed in miles per hour	Service brake						Emergency brake	
	PFC 0.9	PFC 0.9	PFC 0.9	PFC 0.9	PFC 0.9	PFC 0.9	PFC 0.9	PFC 0.9
	(1)	(2)	(3)	(4)	(5)	(6)	(7)	(8)
20	32	35	30	35	38	28	83	85
25	49	54	45	54	59	43	123	131
30	70	78	65	78	84	61	170	186
35	96	106	89	106	114	84	225	250
40	125	138	114	138	149	108	288	325
45	158	175	144	175	189	136	358	409
50	195	216	176	216	233	166	435	504
55	236	261	212	261	281	199	520	608
60	280	310	250	310	335	235	613	720

Note:
(1) Loaded and Unloaded Buses.
(2) Loaded Single-Unit Trucks.
(3) Loaded Tractors with Three Axles and a GVWR of 70,000 lbs. or less; or with Four of More Axles and a GVWR of 85,000 lbs. or less. Tested with an Unbraked Control Trailer.
(4) Loaded Tractors with Three Axles and a GVWR greater than 70,000 lbs.; or with Four or More Axles and a GVWR greater than 85,000 lbs. Tested with an Unbraked Control Trailer.
(5) Unloaded Single-Unit Trucks.
(6) Unloaded Tractors (Bobtail).
(7) All Vehicles except Tractors, Loaded and Unloaded.
(8) Unloaded Tractors.

TABLE IIA—STOPPING DISTANCE IN FEET: OPTIONAL REQUIREMENTS FOR: (1) THREE-AXLE TRACTORS WITH A GVWR OF 59,600 POUNDS OR LESS MANUFACTURED BEFORE AUGUST 1, 2011; (2) TWO-AXLE TRACTORS MANUFACTURED BEFORE AUGUST 1, 2013; AND (3) TRACTORS WITH A GVWR OF MORE THAN 59,600 POUNDS MANUFACTURED BEFORE AUGUST 1, 2013

Vehicle speed in miles per hour	Service brake				Emergency brake	
	PFC 0.9	PFC 0.9	PFC 0.9	PFC 0.9	PFC 0.9	PFC 0.9
	(1)	(2)	(3)	(4)	(5)	(6)
20	32	35	38	40	83	85
25	49	54	59	62	123	131
30	70	78	84	89	170	186
35	96	106	114	121	225	250
40	125	138	149	158	288	325
45	158	175	189	200	358	409
50	195	216	233	247	435	504
55	236	261	281	299	520	608
60	280	310	335	355	613	720

Note: (1) Loaded and unloaded buses; (2) Loaded single unit trucks; (3) Unloaded truck tractors and single unit trucks; (4) Loaded truck tractors tested with an unbraked control trailer; (5) All vehicles except truck tractors; (6) Unloaded truck tractors.

* * * * *

§ 571.122 Standard No. 122; Motorcycle brake systems.

S1. *Scope*. This standard specifies performance requirements for motorcycle brake systems.

S2. *Purpose*. The purpose of the standard is to insure safe motorcycle braking performance under normal and emergency conditions.

S3. *Application*. This standard applies to motorcycles.

S4. *Definitions*.

Braking interval means the distance measured from the start of one brake application to the start of the next brake application.

§571.124 Standard No. 124; Accelerator control systems.

S1. *Scope*. This standard establishes requirements for the return of a vehicle's throttle to the idle position when the driver removes the actuating force from the accelerator control, or in the event of a severance or disconnection in the accelerator control system.

S2. *Purpose*. The purpose of this standard is to reduce deaths and injuries resulting from engine overspeed caused by malfunctions in the accelerator control system.

S3. *Application*. This standard applies to passenger cars, multi-purpose passenger vehicles, trucks, and buses.

S4. *Definitions*.

S4.1 *Driver-operated accelerator control system* means all vehicle components, except the fuel metering device, that regulate engine speed in direct response to movement of the driver-operated control and that return the throttle to the idle position upon release of the actuating force.

Fuel metering device means the carburetor, or in the case of certain engines the fuel injector, fuel distributor or fuel injection pump.

Throttle means the component of the fuel metering device that connects to the driver-operated accelerator control system and that by input from the driver-operated accelerator control system controls the engine speed.

Idle position means the position of the throttle at which it first comes in contact with an engine idle speed control appropriate for existing conditions according to the manufacturers' recommendations. These conditions include, but are not limited to, engine speed adjustments for cold engine, air conditioning, and emission control, and the use of throttle setting devices.

Ambient temperature means the surrounding air temperature, at a distance such that it is not significantly affected by heat from the vehicle under test.

S4.2 In the case of vehicles powered by electric motors, the words *throttle* and *idle* refer to the motor speed controller and motor shutdown, respectively.

S5. *Requirements*. The vehicle shall meet the following requirements when the engine is running under any load condition, and at any ambient temperature between −40 degrees Celsius and +52 degrees Celsius after 12 hours of conditioning at any temperature within that range.

S5.1 There shall be at least two sources of energy capable of returning the throttle to the idle position within the time limit specified by S5.3 from any accelerator position or speed whenever the driver removes the opposing actuating force. In the event of failure of one source of energy by a single severance or disconnection, the throttle shall return to the idle position within the time limits specified by S5.3, from any accelerator position or speed whenever the driver removes the opposing actuating force.

S5.2 The throttle shall return to the idle position from any accelerator position or any speed of which the engine is capable whenever any one component of the accelerator control system is disconnected or severed at a single point. The return to idle shall occur within the time limit specified by S5.3, measured either from the time of severance or disconnection or from the first removal of the opposing actuating force by the driver.

S5.3 Except as provided below, maximum time to return to idle position shall be 1 second for vehicles of 4536 kilograms or less GVWR, and 2 seconds for vehicles of more than 4536 kilograms GVWR. Maximum time to return to idle position shall be 3 seconds for any vehicle that is exposed to ambient air at −18 degrees Celsius to −40 degrees Celsius during the test or for any portion of the 12-hour conditioning period.

[38 FR 2980, Jan. 31, 1973; as amended at 60 FR 13645, Mar. 14, 1995]

§571.125 Standard No. 125; Warning devices.

S1. *Scope*. This standard establishes requirements for devices, without self-contained energy sources, that are designed to be carried in motor vehicles and used to warn approaching traffic of the presence of a stopped vehicle, except for devices designed to be permanently affixed to the vehicle.

S2. *Purpose*. The purpose of this standard is to reduce deaths and injuries due to rear end collisions between moving traffic and disabled vehicles.

S3. *Application*. This standard applies to devices, without self-contained energy sources, that are designed to be carried in buses and trucks that have a gross vehicle weight rating (GVWR) greater than 10,000 pounds. These devices are used to warn approaching traffic of the presence of a stopped vehicle, except for devices designed to be permanently affixed to the vehicle.

S4. *Definitions*. *Entrance angle* means the angle having as its sides the line through the center, and normal to the face, of the object to be tested, and the line from the center of the object to the center of the source of illumination (Figure 2).

Fluorescent means the property of emitting visible light due to the absorption of radiation of a shorter wavelength which may be outside the visible spectrum.

Observation angle means the angle having as its sides the line from the observation point to the center of the object to be tested and the line from the center of that object to the center of the source of illumination (Figure 2).

Reflex reflective means reflective of light in directions close to the direction of incident light, over a wide range of variations in the direction of incident light.

S5. *Requirements*.

S5.1 *Equipment*.

S5.1.1 Reflex reflective material and fluorescent material that meet the requirements of this standard shall be affixed to both faces of the warning device. Alternatively, a dual purpose orange fluorescent and red reflective material that meets the requirements of this standard (hereafter referred to as ''dual purpose material'') may be affixed to both faces in places of the reflective and fluorescent materials.

S5.1.2 Each warning device shall be protected from damage and deterioration—

(a) By enclosure in an opaque protective reusable container, except that two or three warning devices intended to be sold for use as a set with a single vehicle may be enclosed in a single container; or

(b) By secure attachment to any light-tight, enclosed, and easily accessible compartment of a new motor vehicle with which it is supplied by the vehicle manufacturer.

S5.1.3 The warning device shall be designed to be erected, and replaced in its container, without the use of tools.

S5.1.4 The warning device shall be permanently and legibly marked with:

(a) Name of manufacturer;

(b) Month and year of manufacture, which may be expressed numerically, as ''6/72''; and

(c) The symbol DOT, or the statement that the warning device complies with all applicable Federal motor vehicle safety standards.

S5.1.5 Each warning device shall have instructions for its erection and display.

(a) The instructions shall be either indelibly printed on the warning device or attached in such a manner that they cannot be easily removed.

(b) Instructions for each warning device shall include a recommendation that the driver activate the vehicular hazard warning signal lamps before leaving the vehicle to erect the warning device.

(c) Instructions shall include the illustration depicted in Figure 3 indicating recommended positioning.

S5.2 *Configuration*.

S5.2.1 When the warning device is erected on level ground:

(a) Part of the warning device shall form an equilateral triangle that stands in a plane not more than 10° from the vertical, with the lower edge of the base of the triangle horizontal and not less than 1 inch above the ground.

(b) None of the required portion of the reflective material and fluorescent material shall be obscured by any other part of the warning device except for any portion of the material over which it is necessary to provide fasteners, pivoting beads or other means to allow collapsibility or support of the device. In any event, sufficient reflective and fluorescent material shall be used on the triangle to meet the requirements of S5.4 and S5.5.

S5.2.2 Each of the three sides of the triangular portion of the warning device shall not be less than 17 and not

more than 22 inches long, and not less than 2 and not more than 3 inches wide (Figure 1).

S5.2.3 Each face of the triangular portion of the warning device shall have an outer border of red reflex reflective material of uniform width and not less than 0.75 and not more than 1.75 inches wide, and an inner border of orange fluorescent material of uniform width and not less than 1.25 and not more than 1.30 inches wide (Figure 1). However, this requirement shall not apply if the dual purpose material is used.

S5.2.4 Each vertex of the triangular portion of the warning device shall have a radius of not less than 0.25 inch and not more than 0.50 inch.

S5.2.5 All edges shall be rounded or chamfered, as necessary, to reduce the possibility of cutting or harm to the user.

S5.2.6 The device shall consist entirely of the triangular portion and attachments necessary for its support and enclosure, without additional visible shapes or attachments.

S5.3 *Color*.

S5.3.1 The color of the red reflex reflective material on the warning device shall have the following characteristics, both before and after the warning device has been conditioned in accordance with S6.1, when the source of illumination is a lamp with a tungsten filament operating at 2856° Kelvin color temperature. Expressed in terms of the International Commission on Illumination (CIE) 1931 standard colorimetric observer system (CIE chromaticity diagram, Figure 4), the chromaticity coordinates of the red reflex reflective material shall lie within the region bounded by the spectrum locus and the lines on the diagram defined by the following equations:

Boundary	Equations
Yellow	y=0.33
White	x+y=0.98

S5.3.2 The color of the orange fluorescent material on the warning device shall have the following characteristics, both before and after the warning device has been conditioned in accordance with S6.1, when the source of illumination is a 150-watt high pressure xenon compact arc lamp. Expressed in terms of the International Commission on Illumination (CIE) 1931 standard colorimetric observer system, the chromaticity coordinates of the orange fluorescent material shall lie within the region bounded by the spectrum locus and the lines on the diagram defined by the following equations:

Boundary	Equations
Yellow	y=0.49 x+0.17
White	x+y=0.93
Red	y=0.35

The 150-watt high pressure xenon compact arc lamp shall illuminate the sample using the unmodified spectrum at an angle of incidence of 45° and an angle of observation of 90°. If dual purpose material is being tested, it shall be illuminated by a 150-watt high pressure xenon compact arc lamp, whose light is diffused by an integrating sphere.

S5.4 *Reflectivity*. When the red reflex reflective material on the warning device is tested in accordance with S6.2, both before and after the warning device has been conditioned in accordance with S6.1, its total candlepower per incident foot candle shall be not less than the values specified in Table I for each of the listed entrance angles.

S5.5 *Luminance*. When the orange fluorescent material on the warning device is tested in accordance with S6.3, both before and after the warning device has been conditioned in accordance with S6.1, it shall have a minimum relative luminance of 25 percent of a flat magnesium oxide surface and a minimum product of that relative luminance and width in inches of 44.

S5.6 *Stability*. When the warning device is erected on a horizontal brushed concrete surface both with and against the brush marks and subjected to a horizontal wind of 40 miles per hour in any direction for 3 minutes—

(a) No part of it shall slide more than 3 inches from its initial position;

(b) Its triangular portion shall not tilt to a position that is more than 10° from the vertical; and

(c) Its triangular position shall not turn through a horizontal angle of more than 10° in either direction from the initial position.

S5.7 *Durability*. When the warning device is conditioned in accordance with S6.1, no part of the warning device shall become warped or separated from the rest of the warning device.

S6. *Test Procedures*.

S6.1 *Conditions*.

S6.1.1 Submit the warning device to the following conditioning sequence, returning the device after each step in the sequence to ambient air at 68 °F. for at least 2 hours.

(a) Minus 40 °F. for 16 hours in a circulating air chamber using ambient air which would have not less than 30 percent and not more than 70 percent relative humidity at 70 °F.;

(b) 150 °F. for 16 hours in a circulating air oven using ambient air which would have not less than 30 percent and not more than 70 percent relative humidity at 70 °F.;

(c) 100 °F. and 90 percent relative humidity for 16 hours;

(d) Salt spray (fog) test in accordance with American Society of Testing and Materials Standard B–117, Standard Method of Salt Spray (fog) testing, August 1964, except that the test shall be for 4 hours rather than 40 hours; and

(e) Immersion for 2 hours in water at a temperature of 100 °F.

S6.2 *Reflectivity Test*. Test the red reflex reflective materials as follows:

(a) Unless dual purpose material is used, prevent the orange fluorescent material from affecting the photometric measurement of the reflectivity of the red reflex reflective material, either by separation or masking.

(b) Use a lamp with a tungsten filament operating at 2856° Kelvin color temperature as the source of illumination.

(c) Place the source of illumination 100 feet from the red reflex reflective material (Figure 2).

(d) Place the observation point directly above the source of illumination (Figure 2).

(e) Calculate the total candlepower per incident foot candle of the red reflex reflective material at each of the entrance and observation angles specified in Table 1.

S6.3 *Luminance Test*. Test the orange fluorescent material as follows:

(a) Unless dual purpose material is used, prevent the red reflex reflective material from affecting the photometric measurement of the luminance of the orange fluorescent material.

(b) Using a 150-watt high pressure xenon compact arc lamp as the light source, illuminate the test sample at an angle of incidence of 45° and an angle of observation of 90°. If dual purpose material is being tested, illuminate the sample diffusely through an integrating sphere.

(c) Measure the luminance of the material at a perpendicular viewing angle, with no ray of the viewing beam more than 5° from the perpendicular to the specimen.

(d) Repeat the procedure for a flat magnesium oxide surface, and compute the quotient (percentage) of the luminance of the material relative to that of the magnesium oxide surface.

WARNING DEVICE

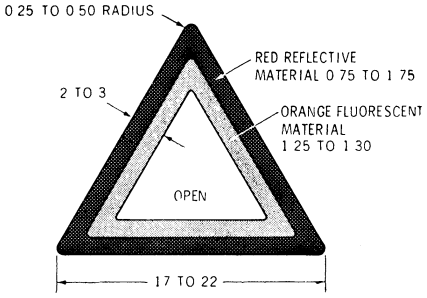

FIG. 1—DIMENSIONS OF WARNING DEVICE (INCHES)

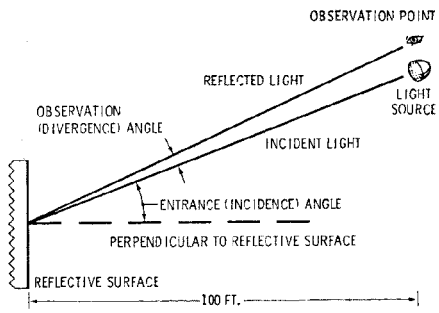

REFLECTIVITY TEST DIAGRAM

Figure 2

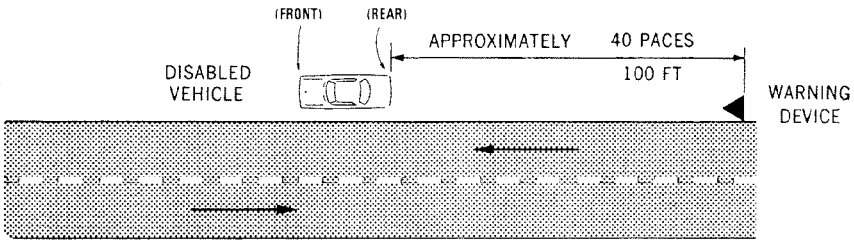

RECOMMENDED WARNING DEVICE POSITIONING

Figure 3

TOTAL MINIMUM CANDLEPOWER PER INCIDENT FOOT CANDLE

Observation Angles - Degrees	Entrance Angles - Degrees						
	0	10 up	10 down	20 left	20 right	30 left	30 right
0.2	80	80	80	40	40	8.0	8.0
1.5	0.8	0.8	0.8	0.4	0.4	0.08	0.08

TABLE 1

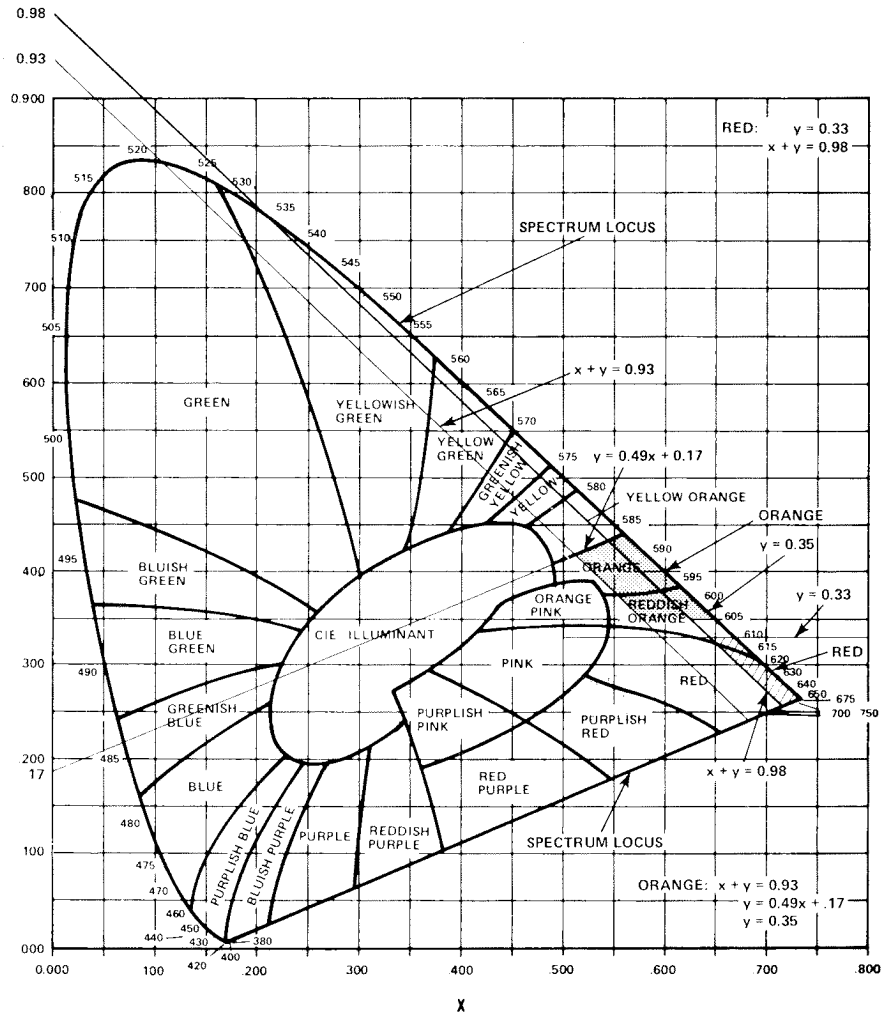

Figure 4. CIE Chromaticity Diagram.

[39 FR 28636, Aug. 9, 1974, as amended at 40 FR 4, Jan. 2, 1975; 59 FR 49591, Sept. 29, 1994]

§ 571.126 Standard No. 126; Electronic stability control systems.

S1. *Scope.* This standard establishes performance and equipment requirements for electronic stability control (ESC) systems.

S2. *Purpose.* The purpose of this standard is to reduce the number of deaths and injuries that result from crashes in which the driver loses directional control of the vehicle, including those resulting in vehicle rollover.

S3. *Application and Incorporation by Reference.*

S3.1 *Application.* This standard applies to passenger cars, multipurpose passenger vehicles, trucks, and buses with a gross vehicle weight rating of

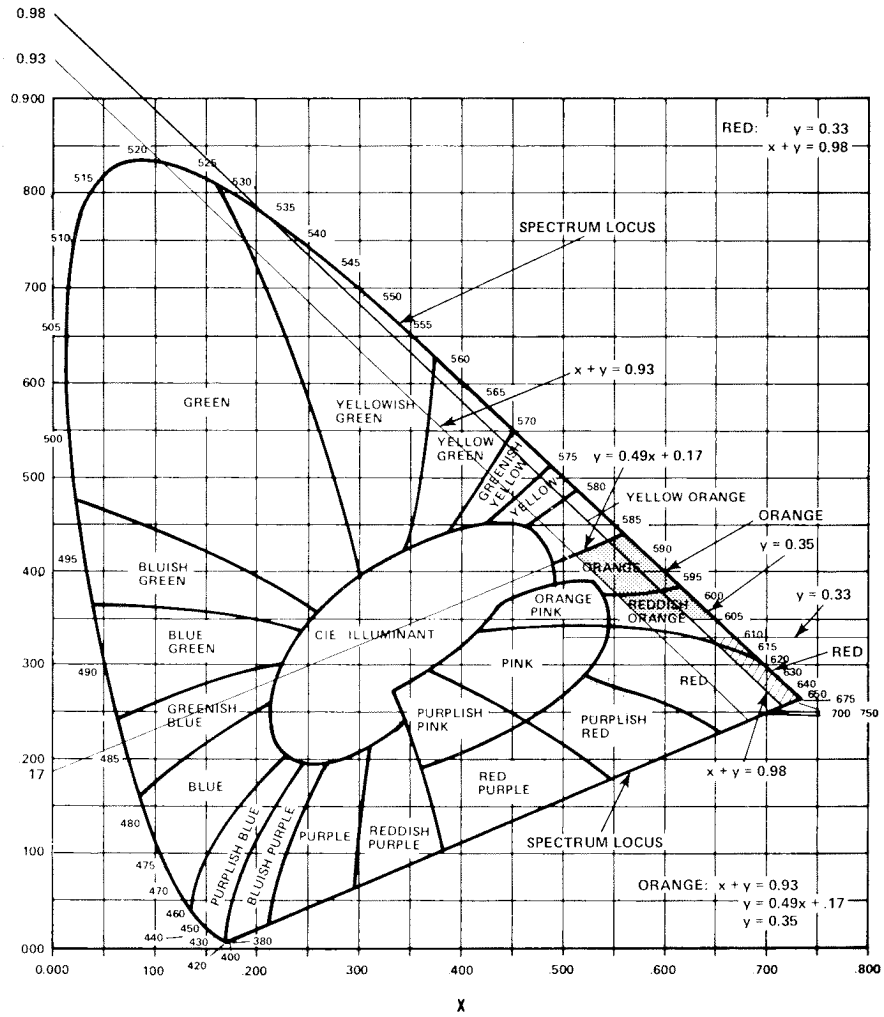

Figure 4. CIE Chromaticity Diagram.

[39 FR 28636, Aug. 9, 1974, as amended at 40 FR 4, Jan. 2, 1975; 59 FR 49591, Sept. 29, 1994]

§ 571.126 Standard No. 126; Electronic stability control systems.

S1. *Scope.* This standard establishes performance and equipment requirements for electronic stability control (ESC) systems.

S2. *Purpose.* The purpose of this standard is to reduce the number of deaths and injuries that result from crashes in which the driver loses directional control of the vehicle, including those resulting in vehicle rollover.

S3. *Application and Incorporation by Reference.*

S3.1 *Application.* This standard applies to passenger cars, multipurpose passenger vehicles, trucks, and buses with a gross vehicle weight rating of

4,536 kilograms (10,000 pounds) or less, according to the phase-in schedule specified in S8 of this standard.

S3.2 *Incorporation by reference.* ASTM E1337–90 (Reapproved 1996), Standard Test Method for Determining Longitudinal Peak Braking Coefficient of Paved Surfaces Using a STD Reference Test Tire, and ASTM E1136–93 (1993), Standard Specification for a Radial Standard Reference Test Tire, are incorporated by reference in S6.2.2 of this section. The Director of the Federal Register has approved the incorporation by reference of this material in accordance with 5 U.S.C. 552(a) and 1 CFR Part 51. Copies of ASTM E1337–90 (rev. 1996) and ASTM E1136–93 (1993) may be obtained from the ASTM Web site at *http://www.astm.org*, or by contacting ASTM, 100 Barr Harbor Drive, West Conshohocken, PA 19428–2959. Copies of ASTM E1337–90 (Reapproved 1996) and ASTM E1136–93 (1993) may be inspected at NHTSA's Office of Rulemaking, 400 Seventh Street, SW., Washington, DC 20590, or at the National Archives and Records Administration (NARA). For information on the availability of this material at NARA, call 202–741–6030, or go to: *http://www.archives.gov/federal_register/code_of_federal_regulations/ibr_locations.html.*

S4. *Definitions.*

Ackerman Steer Angle means the angle whose tangent is the wheelbase divided by the radius of the turn at a very low speed.

Electronic Stability Control System or ESC System means a system that has all of the following attributes:

(1) That augments vehicle directional stability by applying and adjusting the vehicle brake torques individually to induce a correcting yaw moment to a vehicle;

(2) That is computer controlled with the computer using a closed-loop algorithm to limit vehicle oversteer and to limit vehicle understeer;

(3) That has a means to determine the vehicle's yaw rate and to estimate its side slip or side slip derivative with respect to time;

(4) That has a means to monitor driver steering inputs;

(5) That has an algorithm to determine the need, and a means to modify engine torque, as necessary, to assist the driver in maintaining control of the vehicle, and

(6) That is operational over the full speed range of the vehicle (except at vehicle speeds less than 15 km/h (9.3 mph) or when being driven in reverse).

Lateral Acceleration means the component of the vector acceleration of a point in the vehicle perpendicular to the vehicle x axis (longitudinal) and parallel to the road plane.

Oversteer means a condition in which the vehicle's yaw rate is greater than the yaw rate that would occur at the vehicle's speed as a result of the Ackerman Steer Angle.

Sideslip or side slip angle means the arctangent of the lateral velocity of the center of gravity of the vehicle divided by the longitudinal velocity of the center of gravity.

Understeer means a condition in which the vehicle's yaw rate is less than the yaw rate that would occur at the vehicle's speed as result of the Ackerman Steer Angle.

Yaw rate means the rate of change of the vehicle's heading angle measured in degrees/second of rotation about a vertical axis through the vehicle's center of gravity.

S5. *Requirements.* Subject to the phase-in set forth in S8, each vehicle must be equipped with an ESC system that meets the requirements specified in S5 under the test conditions specified in S6 and the test procedures specified in S7 of this standard.

S5.1 *Required Equipment.* Vehicles to which this standard applies must be equipped with an electronic stability control system that:

S5.1.1 Is capable of applying brake torques individually to all four wheels and has a control algorithm that utilizes this capability.

S5.1.2 Is operational during all phases of driving including acceleration, coasting, and deceleration (including braking), except when the driver has disabled ESC, the vehicle speed is below 15 km/h (9.3 mph), or the vehicle is being driven in reverse.

S5.1.3 Remains capable of activation even if the antilock brake system or traction control system is also activated.

S5.2 *Performance Requirements.* During each test performed under the test conditions of S6 and the test procedure of S7.9, the vehicle with the ESC system engaged must satisfy the stability criteria of S5.2.1 and S5.2.2, and it must satisfy the responsiveness criterion of S5.2.3 during each of those tests conducted with a commanded steering wheel angle of 5A or greater, where A is the steering wheel angle computed in S7.6.1.

S5.2.1 The yaw rate measured one second after completion of the sine with dwell steering input (time T_0 + 1 in Figure 1) must not exceed 35 percent of the first peak value of yaw rate recorded after the steering wheel angle changes sign (between first and second peaks) ($\dot{\psi}_{peak}$ in Figure 1) during the same test run, and

S5.2.2 The yaw rate measured 1.75 seconds after completion of the sine with dwell steering input must not exceed 20 percent of the first peak value of yaw rate recorded after the steering wheel angle changes sign (between first and second peaks) during the same test run.

S5.2.3 The lateral displacement of the vehicle center of gravity with respect to its initial straight path must be at least 1.83 m (6 feet) for vehicles with a GVWR of 3,500kg (7,716 lb) or less, and 1.52 m (5 feet) for vehicles with a GVWR greater than 3,500 kg (7,716 lb) when computed 1.07 seconds after the Beginning of Steer (BOS). BOS is defined in S7.11.6.

S5.2.3.1 The computation of lateral displacement is performed using double integration with respect to time of the measurement of lateral acceleration at the vehicle center of gravity, as expressed by the formula:

$$\text{Lateral Displacement} = \iint Ay_{C.G.}dt$$

S5.2.3.2 Time t = 0 for the integration operation is the instant of steering initiation, known as the Beginning of Steer (BOS). BOS is defined in S7.11.6.

S5.3 *ESC Malfunction.* The vehicle must be equipped with a telltale that provides a warning to the driver of the occurrence of one or more malfunctions that affect the generation or transmission of control or response signals in the vehicle's electronic stability control system. The ESC malfunction telltale:

S5.3.1 As of September 1, 2011, must be mounted inside the occupant compartment in front of and in clear view of the driver;

S5.3.2 As of September 1, 2011, must be identified by the symbol shown for ''ESC Malfunction Telltale'' or the specified words or abbreviations listed in Table 1 of Standard No. 101 (49 CFR 571.101);

S5.3.3 As of September 1, 2011, except as provided in paragraph S5.3.4, the ESC malfunction telltale must illuminate only when a malfunction(s) exists and must remain continuously illuminated under the conditions specified in S5.3 for as long as the malfunction(s) exists, whenever the ignition locking system is in the ''On'' (''Run'') position; and

S5.3.4 As of September 1, 2011, except as provided in paragraph S5.3.5, each ESC malfunction telltale must be activated as a check of lamp function either when the ignition locking system is turned to the ''On'' (''Run'') position when the engine is not running, or when the ignition locking system is in a position between ''On'' (''Run'') and ''Start'' that is designated by the manufacturer as a check position.

S5.3.5 The ESC malfunction telltale need not be activated when a starter interlock is in operation.

S5.3.6 The requirement S5.3.4 does not apply to telltales shown in a common space.

S5.3.7 The ESC malfunction telltale must extinguish at the next ignition cycle after the malfunction has been corrected.

S5.3.8 The manufacturer may use the ESC malfunction telltale in a flashing mode to indicate ESC operation.

S5.3.9 Prior to September 1, 2011, a disconnection of the power to the ESC electronic control unit may be indicated by the ABS malfunction telltale instead of the ESC malfunction telltale, and a disconnection of the ''ESC Off'' control need not illuminate the ESC malfunction telltale.

S5.4. *ESC Off and Other System Controls.* The manufacturer may include an ''ESC Off'' control whose only purpose

is to place the ESC system in a mode in which it will no longer satisfy the performance requirements of S5.2.1, S5.2.2 and S5.2.3. Manufacturers may also provide controls for other systems that have an ancillary effect upon ESC operation. Controls of either kind that place the ESC system in a mode in which it will no longer satisfy the performance requirements of S5.2.1, S5.2.2 and S5.2.3 are permitted, provided that:

S5.4.1 The vehicle's ESC system must always return to a mode that satisfies the requirements of S5.1 and S5.2 at the initiation of each new ignition cycle, regardless of what mode the driver had previously selected except if that mode is specifically for enhanced traction during low-speed, off-road driving and is entered by the driver using a mechanical control that cannot be automatically reset electrically. If the system has more than one mode that satisfies these requirements, the default mode must be the mode that satisfies the performance requirements of S5.2 by the greatest margin.

S5.4.2 As of September 1, 2011, a control whose only purpose is to place the ESC system in a mode in which it will no longer satisfy the performance requirements of S5.2.1, S5.2.2 and S5.2.3 must be identified by the symbol shown for ''ESC Off'' in Table 1 of Standard No. 101 (49 CFR 571.101) or the text, ''ESC Off'' as listed under ''Word(s) or Abbreviations'' in Table 1 of Standard No. 101 (49 CFR 571.101).

S5.4.3 A control for another system that has the ancillary effect of placing the ESC system in a mode in which it no longer satisfies the performance requirements of S5.2.1, S5.2.2, and S5.2.3 need not be identified by the ''ESC Off'' identifiers in Table 1 of Standard No. 101 (49 CFR 571.101), but the ESC status must be identified by the ''ESC Off'' telltale in accordance with S5.5, as of September 1, 2011.

S5.5 *ESC Off Telltale*

S5.5.1 The vehicle manufacturer must provide a telltale indicating that the vehicle has been put into a mode that renders it unable to satisfy the requirements of S5.2.1, S5.2.2 and S5.2.3, if such a mode is provided.

S5.5.2 As of September 1, 2011, the ''ESC Off'' telltale must be identified by the symbol shown for ''ESC Off'' in Table 1 of Standard No. 101 (49 CFR 571.101) or the text, ''ESC Off'' as listed under ''Word(s) or Abbreviations'' in Table 1 of Standard No. 101 (49 CFR 571.101).

S5.5.3 As of September 1, 2011, the ''ESC Off'' telltale must be mounted inside the occupant compartment in front of and in clear view of the driver.

S5.5.4 The ''ESC Off'' telltale must remain continuously illuminated for as long as the ESC is in a mode that renders it unable to satisfy the requirements of S5.2.1, S5.2.2 and S5.2.3, and

S5.5.5 Notwithstanding S5.3.1(e) of 49 CFR 571.101, the vehicle manufacturer may use the ''ESC Off'' telltale to indicate an ESC level of function other than the fully functional default mode even if the vehicle would meet S5.2.1, S5.2.2 and S5.2.3 at that level of ESC function.

S5.5.6 As of September 1, 2011, except as provided in paragraph S5.5.7 and S5.5.8, each ''ESC Off'' telltale must be activated as a check of lamp function either when the ignition locking system is turned to the ''On'' (''Run'') position when the engine is not running, or when the ignition locking system is in a position between ''On'' (''Run'') and ''Start'' that is designated by the manufacturer as a check position.

S5.5.7 The ''ESC Off'' telltale need not be activated when a starter interlock is in operation.

S5.5.8 The requirement S5.5.6 does not apply to telltales shown in a common space.

S5.5.9 The ''ESC Off'' telltale must extinguish after the ESC system has been returned to its fully functional default mode.

S5.6 *ESC System Technical Documentation*. To ensure a vehicle is equipped with an ESC system that meets the definition of ''ESC System'' in S4, the vehicle manufacturer must make available to the agency, upon request, the following documentation:

S5.6.1 A system diagram that identifies all ESC system hardware. The diagram must identify what components are used to generate brake torques at each wheel, determine vehicle yaw rate, estimated side slip or the side slip derivative and driver steering inputs.

S5.6.2 A written explanation describing the ESC system basic operational characteristics. This explanation must include a discussion on the system's capability to apply brake torques at each wheel and how the system modifies engine torque during ESC system activation. The explanation must also identify the vehicle speed range and the driving phases (acceleration, deceleration, coasting, during activation of the ABS or traction control) under which the ESC system can activate.

S5.6.3 A logic diagram that supports the explanation provided in S5.6.2.

S5.6.4 Specifically for mitigating vehicle understeer, a discussion of the pertinent inputs to the computer or calculations within the computer and how its algorithm uses that information and controls ESC system hardware to limit vehicle understeer.

S6. *Test Conditions.*

S6.1 *Ambient conditions.*

S6.1.1 The ambient temperature is between 7 °C (45 °F) and 40 °C (104 °F).

S6.1.2 The maximum wind speed is no greater than 10 m/s (22 mph) for passenger cars and 5 m/s (11 mph) for multipurpose passenger vehicles, trucks and buses.

S6.2 *Road test surface.*

S6.2.1 The tests are conducted on a dry, uniform, solid-paved surface. Surfaces with irregularities and undulations, such as dips and large cracks, are unsuitable.

S6.2.2 The road test surface must produce a peak friction coefficient (PFC) of 0.9 when measured using an American Society for Testing and Materials (ASTM) E1136–93 (1993) standard reference test tire, in accordance with ASTM Method E 1337–90 (Reapproved 1996), at a speed of 64.4 km/h (40 mph), without water delivery. (These standards are here incorporated by reference as explained in S3.2 above.)

S6.2.3 The test surface has a consistent slope between level and 1%.

S6.3 *Vehicle conditions.*

S6.3.1 The ESC system is enabled for all testing.

S6.3.2 *Test Weight.* The vehicle is loaded with the fuel tank filled to at least 75 percent of capacity, and total interior load of 168 kg (370 lbs) comprised of the test driver, approximately 59 kg (130 lbs) of test equipment (automated steering machine, data acquisition system and the power supply for the steering machine), and ballast as required by differences in the weight of test drivers and test equipment. Where required, ballast shall be placed on the floor behind the passenger front seat or if necessary in the front passenger foot well area. All ballast shall be secured in a way that prevents it from becoming dislodged during test conduct.

S6.3.3 *Tires.* The vehicle is tested with the tires installed on the vehicle at time of initial vehicle sale. The tires are inflated to the vehicle manufacturer's recommended cold tire inflation pressure(s) specified on the vehicle's placard or the tire inflation pressure label. Tubes may be installed to prevent tire de-beading.

S6.3.4 *Outriggers.* Outriggers must be used for testing trucks, multipurpose passenger vehicles, and buses. Vehicles with a baseline weight under 2,722 kg (6,000 lbs) must be equipped with ''standard'' outriggers and vehicles with a baseline weight equal to or greater than 2,722 kg (6,000 lbs) must be equipped with ''heavy'' outriggers. A vehicle's baseline weight is the weight of the vehicle delivered from the dealer, fully fueled, with a 73 kg (160 lb) driver. Standard outriggers shall be designed with a maximum weight of 32 kg (70 lb) and a maximum roll moment of inertia of 35.9 kg-m^2 (26.5 ft-lb-sec^2). Heavy outriggers shall be designed with a maximum weight of 39 kg (86 lb) and a maximum roll moment of inertia of 40.7 kg-m^2 (30.0 ft-lb-sec^2).

S6.3.5 *Automated steering machine.* A steering machine programmed to execute the required steering pattern must be used in S7.5.2, S7.5.3, S7.6 and S7.9. The steering machine shall be capable of supplying steering torques between 40 to 60 Nm (29.5 to 44.3 lb-ft). The steering machine must be able to apply these torques when operating with steering wheel velocities up to 1200 degrees per second.

S7. *Test Procedure.*

S7.1 Inflate the vehicles' tires to the cold tire inflation pressure(s) provided on the vehicle's placard or the tire inflation pressure label.

S7.2 *Telltale bulb check*. With the vehicle stationary and the ignition locking system in the ''Lock'' or ''Off'' position, activate the ignition locking system to the ''On'' (''Run'') position or, where applicable, the appropriate position for the lamp check. The ESC malfunction telltale must be activated as a check of lamp function, as specified in S5.3.4, and if equipped, the ''ESC Off'' telltale must also be activated as a check of lamp function, as specified in S5.5.6. The telltale bulb check is not required for a telltale shown in a common space as specified in S5.3.6 and S5.5.8.

S7.3 *''ESC Off'' control check*. For vehicles equipped with an ''ESC Off'' control, with the vehicle stationary and the ignition locking system in the ''Lock'' or ''Off'' position, activate the ignition locking system to the ''On'' (''Run'') position. Activate the ''ESC Off'' control and verify that the ''ESC Off'' telltale is illuminated, as specified in S5.5.4. Turn the ignition locking system to the ''Lock'' or ''Off'' position. Again, activate the ignition locking system to the ''On'' (''Run'') position and verify that the ''ESC Off'' telltale has extinguished indicating that the ESC system has been reactivated as specified in S5.4.1.

S7.4 *Brake Conditioning*. Condition the vehicle brakes as follows:

S7.4.1 Ten stops are performed from a speed of 56 km/h (35 mph), with an average deceleration of approximately 0.5 g.

S7.4.2 Immediately following the series of 56 km/h (35 mph) stops, three additional stops are performed from 72 km/h (45 mph).

S7.4.3 When executing the stops in S7.4.2, sufficient force is applied to the brake pedal to activate the vehicle's antilock brake system (ABS) for a majority of each braking event.

S7.4.4 Following completion of the final stop in S7.4.2, the vehicle is driven at a speed of 72 km/h (45 mph) for five minutes to cool the brakes.

S7.5 *Tire Conditioning*. Condition the tires using the following procedure to wear away mold sheen and achieve operating temperature immediately before beginning the test runs of S7.6 and S7.9.

S7.5.1 The test vehicle is driven around a circle 30 meters (100 feet) in diameter at a speed that produces a lateral acceleration of approximately 0.5 to 0.6 g for three clockwise laps followed by three counterclockwise laps.

S7.5.2 Using a sinusoidal steering pattern at a frequency of 1 Hz, a peak steering wheel angle amplitude corresponding to a peak lateral acceleration of 0.5–0.6 g, and a vehicle speed of 56 km/h (35 mph), the vehicle is driven through four passes performing 10 cycles of sinusoidal steering during each pass.

S7.5.3 The steering wheel angle amplitude of the final cycle of the final pass is twice that of the other cycles. The maximum time permitted between all laps and passes is five minutes.

S7.6 *Slowly Increasing Steer Test*. The vehicle is subjected to two series of runs of the Slowly Increasing Steer Test using a constant vehicle speed of 80 ± 2 km/h (50 ± 1 mph) and a steering pattern that increases by 13.5 degrees per second until a lateral acceleration of approximately 0.5 g is obtained. Three repetitions are performed for each test series. One series uses counterclockwise steering, and the other series uses clockwise steering. The maximum time permitted between each test run is five minutes.

S7.6.1 From the Slowly Increasing Steer tests, the quantity ''A'' is determined. ''A'' is the steering wheel angle in degrees that produces a steady state lateral acceleration (corrected using the methods specified in S7.11.3) of 0.3 g for the test vehicle. Utilizing linear regression, A is calculated, to the nearest 0.1 degrees, from each of the six Slowly Increasing Steer tests. The absolute value of the six A's calculated is averaged and rounded to the nearest 0.1 degrees to produce the final quantity, A, used below.

S7.7 After the quantity A has been determined, without replacing the tires, the tire conditioning procedure described in S7.5 is performed immediately prior to conducting the Sine with Dwell Test of S7.9. Initiation of the first Sine with Dwell test series shall begin within two hours after completion of the Slowly Increasing Steer tests of S7.6.

S7.8 Check that the ESC system is enabled by ensuring that the ESC malfunction and ''ESC Off'' (if provided) telltales are not illuminated.

S7.9 *Sine with Dwell Test of Oversteer Intervention and Responsiveness.* The vehicle is subjected to two series of test runs using a steering pattern of a sine wave at 0.7 Hz frequency with a 500 ms delay beginning at the second peak amplitude as shown in Figure 2 (the Sine with Dwell tests). One series uses counterclockwise steering for the first half cycle, and the other series uses clockwise steering for the first half cycle. The vehicle is provided a cool-down period between each test run of 90 seconds to five minutes, with the vehicle stationary.

S7.9.1 The steering motion is initiated with the vehicle coasting in high gear at 80 ±2 km/h (50 ±1 mph).

S7.9.2 In each series of test runs, the steering amplitude is increased from run to run, by 0.5A, provided that no such run will result in a steering amplitude greater than that of the final run specified in S7.9.4.

S7.9.3 The steering amplitude for the initial run of each series is 1.5A where A is the steering wheel angle determined in S7.6.1.

S7.9.4 The steering amplitude of the final run in each series is the greater of 6.5A or 270 degrees, provided the calculated magnitude of 6.5A is less than or equal to 300 degrees. If any 0.5A increment, up to 6.5A, is greater than 300 degrees, the steering amplitude of the final run shall be 300 degrees.

S7.9.5 Upon completion of the two series of test runs, post processing of yaw rate and lateral acceleration data is done as specified in S7.11.

S7.10 *ESC Malfunction Detection.*

S7.10.1 Simulate one or more ESC malfunction(s) by disconnecting the power source to any ESC component, or disconnecting any electrical connection between ESC components (with the vehicle power off). When simulating an ESC malfunction, the electrical connections for the telltale lamp(s) are not to be disconnected.

S7.10.2 With the vehicle initially stationary and the ignition locking system in the ''Lock'' or ''Off'' position, activate the ignition locking system to the ''Start'' position and start the engine. Place the vehicle in a forward gear and obtain a vehicle speed of 48 ± 8 km/h (30 ± 5 mph). Drive the vehicle for at least two minutes including at least one left and one right turning maneuver. Verify that within two minutes of obtaining this vehicle speed the ESC malfunction indicator illuminates in accordance with S5.3.

S7.10.3 Stop the vehicle, deactivate the ignition locking system to the ''Off'' or ''Lock'' position. After a five-minute period, activate the vehicle's ignition locking system to the ''Start'' position and start the engine. Verify that the ESC malfunction indicator again illuminates to signal a malfunction and remains illuminated as long as the engine is running or until the fault is corrected.

S7.10.4 Deactivate the ignition locking system to the ''Off'' or ''Lock'' position. Restore the ESC system to normal operation, activate the ignition system to the ''Start'' position and start the engine. Verify that the telltale has extinguished.

S7.11 *Post Data Processing—Calculations for Performance Metrics.* Yaw rate and lateral displacement measurements and calculations must be processed utilizing the following techniques:

S7.11.1 Raw steering wheel angle data is filtered with a 12-pole phaseless Butterworth filter and a cutoff frequency of 10Hz. The filtered data is then zeroed to remove sensor offset utilizing static pretest data.

S7.11.2 Raw yaw rate data is filtered with a 12-pole phaseless Butterworth filter and a cutoff frequency of 6Hz. The filtered data is then zeroed to remove sensor offset utilizing static pretest data.

S7.11.3 Raw lateral acceleration data is filtered with a 12-pole phaseless Butterworth filter and a cutoff frequency of 6Hz. The filtered data is then zeroed to remove sensor offset utilizing static pretest data. The lateral acceleration data at the vehicle center of gravity is determined by removing the effects caused by vehicle body roll and by correcting for sensor placement via use of coordinate transformation. For data collection, the lateral accelerometer shall be located as close as possible to the position of the vehicle's

longitudinal and lateral centers of gravity.

S7.11.4 Steering wheel velocity is determined by differentiating the filtered steering wheel angle data. The steering wheel velocity data is then filtered with a moving 0.1 second running average filter.

S7.11.5 Lateral acceleration, yaw rate and steering wheel angle data channels are zeroed utilizing a defined ''zeroing range.'' The methods used to establish the zeroing range are defined in S7.11.5.1 and S7.11.5.2.

S7.11.5.1 Using the steering wheel rate data calculated using the methods described in S7.11.4, the first instant steering wheel rate exceeds 75 deg/sec is identified. From this point, steering wheel rate must remain greater than 75 deg/sec for at least 200 ms. If the second condition is not met, the next instant steering wheel rate exceeds 75 deg/sec is identified and the 200 ms validity check applied. This iterative process continues until both conditions are ultimately satisfied.

S7.11.5.2 The ''zeroing range'' is defined as the 1.0 second time period prior to the instant the steering wheel rate exceeds 75 deg/sec (*i.e.*, the instant the steering wheel velocity exceeds 75 deg/sec defines the end of the ''zeroing range'').

S7.11.6 The Beginning of Steer (BOS) is defined as the first instance filtered and zeroed steering wheel angle data reaches −5 degrees (when the initial steering input is counterclockwise) or +5 degrees (when the initial steering input is clockwise) after time defining the end of the ''zeroing range.'' The value for time at the BOS is interpolated.

S7.11.7 The Completion of Steer (COS) is defined as the time the steering wheel angle returns to zero at the completion of the Sine with Dwell steering maneuver. The value for time at the zero degree steering wheel angle is interpolated.

S7.11.8 The second peak yaw rate is defined as the first local yaw rate peak produced by the reversal of the steering wheel. The yaw rates at 1.000 and 1.750 seconds after COS are determined by interpolation.

S7.11.9 Determine lateral velocity by integrating corrected, filtered and zeroed lateral acceleration data. Zero lateral velocity at BOS event. Determine lateral displacement by integrating zeroed lateral velocity. Zero lateral displacement at BOS event. Lateral displacement at 1.07 seconds from BOS event is determined by interpolation.

S8. Phase-in schedule.

S8.1 *Vehicles manufactured on or after September 1, 2008, and before September 1, 2009.* For vehicles manufactured on or after September 1, 2008, and before September 1, 2009, the number of vehicles complying with this standard must not be less than 55 percent of:

(a) The manufacturer's average annual production of vehicles manufactured on or after September 1, 2005, and before September 1, 2008; or

(b) The manufacturer's production on or after September 1, 2008, and before September 1, 2009.

S8.2 *Vehicles manufactured on or after September 1, 2009, and before September 1, 2010.* For vehicles manufactured on or after September 1, 2009, and before September 1, 2010, the number of vehicles complying with this standard must not be less than 75 percent of:

(a) The manufacturer's average annual production of vehicles manufactured on or after September 1, 2006, and before September 1, 2009; or

(b) The manufacturer's production on or after September 1, 2009, and before September 1, 2010.

S8.3 *Vehicles manufactured on or after September 1, 2010, and before September 1, 2011.* For vehicles manufactured on or after September 1, 2010, and before September 1, 2011, the number of vehicles complying with this standard must not be less than 95 percent of:

(a) The manufacturer's average annual production of vehicles manufactured on or after September 1, 2007, and before September 1, 2010; or

(b) The manufacturer's production on or after September 1, 2010, and before September 1, 2011.

S8.4 *Vehicles manufactured on or after September 1, 2011.* All vehicles manufactured on or after September 1, 2011 must comply with this standard.

S8.5 *Calculation of complying vehicles.*

(a) For purposes of complying with S8.1, a manufacturer may count a vehicle if it is certified as complying with

this standard and is manufactured on or after June 5, 2007, but before September 1, 2009.

(b) For purpose of complying with S8.2, a manufacturer may count a vehicle if it:

(1)(i) Is certified as complying with this standard and is manufactured on or after June 5, 2007, but before September 1, 2010; and

(ii) Is not counted toward compliance with S8.1; or

(2) Is manufactured on or after September 1, 2009, but before September 1, 2010.

(c) For purposes of complying with S8.3, a manufacturer may count a vehicle if it:

(1)(i) Is certified as complying with this standard and is manufactured on or after June 5, 2007, but before September 1, 2011; and

(ii) Is not counted toward compliance with S8.1 or S8.2; or

(2) Is manufactured on or after September 1, 2010, but before September 1, 2011.

S8.6 *Vehicles produced by more than one manufacturer.*

S8.6.1 For the purpose of calculating average annual production of vehicles for each manufacturer and the number of vehicles manufactured by each manufacturer under S8.1 through S8.4, a vehicle produced by more than one manufacturer must be attributed to a single manufacturer as follows, subject to S8.6.2:

(a) A vehicle that is imported must be attributed to the importer.

(b) A vehicle manufactured in the United States by more than one manufacturer, one of which also markets the vehicle, must be attributed to the manufacturer that markets the vehicle.

S8.6.2 A vehicle produced by more than one manufacturer must be attributed to any one of the vehicle's manufacturers specified by an express written contract, reported to the National Highway Traffic Safety Administration under 49 CFR Part 585, between the manufacturer so specified and the manufacturer to which the vehicle would otherwise be attributed under S8.6.1.

S8.7 *Small volume manufacturers.*

Vehicles manufactured during any of the three years of the September 1, 2008 through August 31, 2011 phase-in by a manufacturer that produces fewer than 5,000 vehicles for sale in the United States during that year are not subject to the requirements of S8.1, S8.2, S8.3, and S8.5.

S8.8 *Final-stage manufacturers and alterers.*

Vehicles that are manufactured in two or more stages or that are altered (within the meaning of 49 CFR 567.7) after having previously been certified in accordance with Part 567 of this chapter are not subject to the requirements of S8.1 through S8.5. Instead, all vehicles produced by these manufacturers on or after September 1, 2012 must comply with this standard.

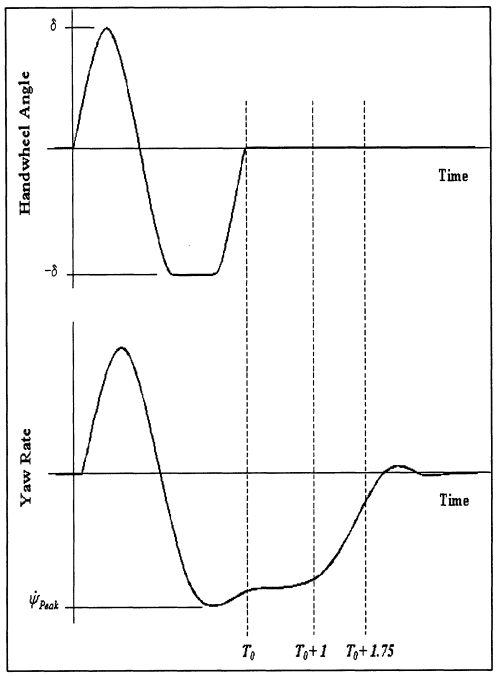

Figure 1. Steering wheel position and yaw velocity information used to assess lateral stability.

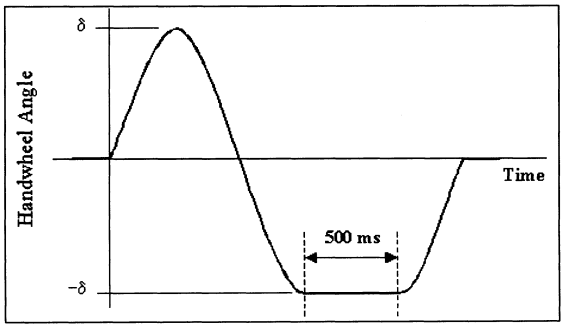

Figure 2. Sine with Dwell steering profile.

[72 FR 17310, Apr. 6, 2007, as amended at 72 FR 34410, June 22, 2007]

EFFECTIVE DATE NOTE: At 73 FR 54542, Sept. 22, 2008, §571.126 was amended by revising S4, S5.1.2, S5.3, S5.3.3, S5.3.9, S5.4, S5.4.1, S5.4.2, S5.4.3, ,S5.5.1, S5.5.4, S6.3.1, S7.10.2, S7.10.3, and S7.10.4; adding S5.3.10, S5.4.2, and S5.5.10; and redesignating S5.4.2 and S5.4.3 to

S5.4.3 and S5.4.4, effective Oct. 22, 2008. For the convenience of the user, the added and revised text is set forth as follows:

§ 571.126 Standard No. 126; Electronic stability control systems.

* * * * *

S4. *Definitions.*

Ackerman Steer Angle means the angle whose tangent is the wheelbase divided by the radius of the turn at a very low speed.

Drive configuration means the driver-selected, or default, condition for distributing power from the engine to the drive wheels (examples include, but are not limited to, 2-wheel drive, front-wheel drive, rear-wheel drive, all-wheel drive, 4-wheel drive high gear with locked differential, and 4-wheel drive low gear).

Electronic stability control system or *ESC system* means a system that has all of the following attributes:

(1) That augments vehicle directional stability by applying and adjusting the vehicle brake torques individually to induce a correcting yaw moment to a vehicle;

(2) That is computer-controlled with the computer using a closed-loop algorithm to limit vehicle oversteer and to limit vehicle understeer;

(3) That has a means to determine the vehicle's yaw rate and to estimate its side slip or side slip derivative with respect to time;

(4) That has a means to monitor driver steering inputs;

(5) That has an algorithm to determine the need, and a means to modify engine torque, as necessary, to assist the driver in maintaining control of the vehicle; and

(6) That is operational over the full speed range of the vehicle (except at vehicle speeds less than 20 km/h (12.4 mph), when being driven in reverse, or during system initialization).

Lateral acceleration means the component of the vector acceleration of a point in the vehicle perpendicular to the vehicle's x-axis (longitudinal) and parallel to the road plane.

Low-range four-wheel drive configuration means a drive configuration that has the effect of locking the drive gears at the front and rear axles together and providing an additional gear reduction between the engine speed and vehicle speed of at least 2.0.

Mode means an ESC performance algorithm, whether driver-selected or not (examples include, but are not limited to, standard (default) mode, performance mode, snow or slippery road mode, or Off mode).

Oversteer means a condition in which the vehicle's yaw rate is greater than the yaw rate that would occur at the vehicle's speed as a result of the Ackerman Steer Angle.

Side slip or *side slip angle* means the arctangent of the lateral velocity of the center of gravity of the vehicle divided by the longitudinal velocity of the center of gravity.

Understeer means a condition in which the vehicle's yaw rate is less than the yaw rate that would occur at the vehicle's speed as a result of the Ackerman Steer Angle.

Yaw rate means the rate of change of the vehicle's heading angle measured in degrees/second of rotation about a vertical axis through the vehicle's center of gravity.

* * * * *

S5.1.2 Is operational during all phases of driving including acceleration, coasting, and deceleration (including braking), except when the driver has disabled ESC, the vehicle speed is below 20 km/h (12.4 mph), the vehicle is being driven in reverse, or during system initialization

* * * * *

S5.3 *ESC Malfunction.* The vehicle must be equipped with a telltale that provides a warning to the driver of the occurrence of one or more malfunctions that affect the generation or transmission of control or response signals in the vehicle's electronic stability control system. When tested according to S7.10, the ESC malfunction telltale:

* * * * *

S5.3.3 As of September 1, 2011, except as provided in paragraphs S5.3.4, S5.3.5, S5.3.8, and S5.3.10, the ESC malfunction telltale must illuminate only when a malfunction(s) of the ESC system exists and must remain continuously illuminated under the conditions specified in S5.3 for as long as the malfunction(s) exists (unless the ''ESC malfunction'' and ''ESC Off'' telltales are combined in a two-part telltale and the ''ESC Off'' telltale is illuminated), whenever the ignition locking system is in the ''On'' (''Run'') position; and

* * * * *

S5.3.9 Prior to September 1, 2011, a disconnection of the power to the ESC electronic control unit may be indicated by the ABS malfunction telltale instead of the ESC malfunction telltale.

S5.3.10 Manufacturers may use the ESC malfunction telltale in a steady-burning mode to indicate malfunctions of ESC-related systems and functions including traction control, trailer stability assist, corner brake control, and other similar functions that use throttle and/or individual wheel torque control to operate and share common components with the ESC system, and may

use the ESC malfunction telltale in a flashing mode to indicate operation of these ESC-related systems.

S5.4 *ESC Off and Other System Controls.* The manufacturer may include an ''ESC Off'' control whose only purpose is to place the ESC system in a mode or modes in which it will no longer satisfy the performance requirements of S5.2.1, S5.2.2, and S5.2.3. An ''ESC Off'' control may be combined with other controls in a multi-function control. Manufacturers may also provide controls for other systems that have an ancillary effect upon ESC operation. Controls of either kind that place the ESC system in a mode in which it will no longer satisfy the performance requirements of S5.2.1, S5.2.2, and S5.2.3 are permitted, provided that:

S5.4.1 The vehicle's ESC system must always return to the manufacturer's original default ESC mode that satisfies the requirements of S5.1 and S5.2 at the initiation of each new ignition cycle, regardless of what ESC mode the driver had previously selected, unless (a) the vehicle is in a low-range four-wheel drive configuration selected by the driver on the previous ignition cycle that is designed for low-speed, off-road driving, or (b) the vehicle is in a four-wheel drive configuration selected by the driver on the previous ignition cycle that is designed for operation at higher speeds on snow-, sand-, or dirt-packed roads and that has the effect of locking the drive gears at the front and rear axles together, provided that the vehicle meets the stability performance requirements of S5.2.1 and S5.2.2 in this mode.

S5.4.2 In addition to the requirements of S5.4.1, if the vehicle's ESC system has more than one ESC mode that satisfies the requirements of S5.1 and S5.2 within the drive configuration selected for the previous ignition cycle, the system must return to the manufacturer's original default ESC mode.

S5.4.3 As of September 1, 2011, a control whose only purpose is to place the ESC system in a mode or modes in which it will no longer satisfy the performance requirements of S5.2.1, S5.2.2, and S5.2.3 must be identified by the symbol shown for ''ESC Off'' in Table 1 of Standard No. 101 (49 CFR 571.101), or the text, ''ESC Off'' as listed under ''Word(s) or Abbreviations'' in Table 1 of Standard No. 101 (49 CFR 571.101).

S5.4.4 A control for another system that has the ancillary effect of placing the ESC system in a mode in which it no longer satisfies the performance requirements of S5.2.1, S5.2.2, and S5.2.3 need not be identified by the ''ESC Off'' identifiers in Table 1 of Standard No. 101 (49 CFR 571.101), but the ESC status must be identified by the ''ESC Off'' telltale in accordance with S5.5, as of September 1, 2011, except if the vehicle is in a 4-wheel drive high gear configuration that has the effect of locking the drive gears at the front and rear axles together provided the vehicle meets the stability performance criteria of S5.2.1 and S5.2.2.

* * * * *

S5.5.1 Except as provided in S5.5.10, the vehicle manufacturer must provide a telltale indicating that the vehicle has been put into a mode that renders it unable to satisfy the requirements of S5.2.1, S5.2.2 and S5.2.3, if such a mode is provided.

* * * * *

S5.5.4 Except as provided in paragraph S5.4.4, the ''ESC Off'' telltale must remain continuously illuminated for as long as the ESC is in a mode that renders it unable to satisfy the requirements of S5.2.1, S5.2.2, and S5.2.3, and

* * * * *

S5.5.10 The ''ESC Off'' telltale need not illuminate when the vehicle is in a 4-wheel drive high gear locked differential configuration that has the effect of locking the drive gears at the front and rear axles together provided the vehicle meets the stability performance requirements of S5.2.1 and S5.2.2.

* * * * *

S6.3.1 The ESC system is enabled for all testing, except when it is turned off directly or by simulating a malfunction in accordance with S7.3 and S7.10, respectively. The ESC system shall be initialized as follows: Place the vehicle in a forward gear and obtain a vehicle speed of 48 ± 8 km/h (30 ± 5 mph). Drive the vehicle for at least two minutes including at least one left and one right turning maneuver and at least one application of the service brake.

* * * * *

S7.10.2 With the vehicle initially stationary and the ignition locking system in the ''Lock'' or ''Off'' position, activate the ignition locking system to the ''Start'' position and start the engine. Place the vehicle in a forward gear and obtain a vehicle speed of 48 ± 8 km/h (30 ± 5 mph). Drive the vehicle for at least two minutes including at least one left and one right turning maneuver and at least one application of the service brake. Verify that within two minutes after obtaining this vehicle speed the ESC malfunction indicator illuminates in accordance with S5.3.

S7.10.3 As of September 1, 2011, stop the vehicle, deactivate the ignition locking system to the ''Off'' or ''Lock'' position. After a five-minute period, activate the vehicle's ignition locking system to the ''Start'' position and start the engine. Verify that the

ESC malfunction indicator again illuminates to signal a malfunction and remains illuminated as long as the engine is running or until the fault is corrected.

S7.10.4 Deactivate the ignition locking system to the ''Off'' or ''Lock'' position. Restore the ESC system to normal operation, activate the ignition system to the ''Start'' position and start the engine. Place the vehicle in a forward gear and obtain a vehicle speed of 48 ± 8 km/h (30 ± 5 mph). Drive the vehicle for at least two minutes including at least one left and one right turning maneuver and at least one application of the service brake. Verify that within two minutes after obtaining this vehicle speed that the ESC malfunction indicator has extinguished.

* * * * *

§§ 571.127–571.128 [Reserved]

§ 571.129 Standard No. 129; New non-pneumatic tires for passenger cars.

S1 *Scope*. This standard specifies tire dimensions and laboratory test requirements for lateral strength, strength, endurance, and high speed performance; defines the tire load rating; and specifies labeling requirements for non-pneumatic spare tires.

S2 *Application*. This standard applies to new temporary spare non-pneumatic tires for use on passenger cars.

S3 *Definitions*.

Carcass means the tire structure except for the tread which provides the major portion of the tire's capability to deflect in response to the vertical loads and tractive forces that the tire transmits from the roadway to the non-pneumatic rim, the wheel center member, or the vehicle and which attaches to the vehicle or attaches, either integrally or separably, to the wheel center member or non-pneumatic rim.

Carcass separation means the pulling away of the carcass from the non-pneumatic rim or wheel center member.

Chunking means the breaking away of pieces of the carcass or tread.

Cracking means any parting within the carcass, tread, or any components that connect the tire to the non-pneumatic rim or wheel center member and, if the non-pneumatic tire is integral with the non-pneumatic rim or wheel center member, any parting within the non-pneumatic rim, or wheel center member.

Load rating means the maximum load a tire is rated to carry.

Maximum tire width means the greater of either the linear distance between the exterior edges of the carcass or the linear distance between the exterior edges of the tread, both being measured parallel to the rolling axis of the tire.

Non-pneumatic rim means a mechanical device which, when a non-pneumatic tire assembly incorporates a wheel, supports the tire, and attaches, either integrally or separably, to the wheel center member and upon which the tire is attached.

Non-pneumatic test rim means with reference to a tire to be tested, any non-pneumatic rim that is listed as appropriate for use with that tire in accordance with S4.4.

Non-pneumatic tire means a mechanical device which transmits, either directly or through a wheel or wheel center member, the vertical load and tractive forces from the roadway to the vehicle, generates the tractive forces that provide the directional control of the vehicle and does not rely on the containment of any gas or fluid for providing those functions.

Non-pneumatic tire assembly means a non-pneumatic tire, alone or in combination with a wheel or wheel center member, which can be mounted on a vehicle.

Non-pneumatic tire identification code means an alphanumeric code that is assigned by the manufacturer to identify the tire with regard to its size, application to a specific non-pneumatic rim or wheel center member or application to a specific vehicle.

Test wheel center member means with reference to a tire to be tested, any wheel center member that is listed as appropriate for use with that tire in accordance with S4.4.

Tread means that portion of the tire that comes in contact with the road.

Tread separation means pulling away of the tread from the carcass.

Wheel means a mechanical device which consists of a non-pneumatic rim and wheel center member and which, in the case of a non-pneumatic tire assembly incorporating a wheel, provides the connection between the tire and the vehicle.

§571.131 Standard No. 131; School bus pedestrian safety devices.

S1. *Scope.* This standard establishes requirements for devices that can be installed on school buses to improve the safety of pedestrians in the vicinity of stopped school buses.

S2. *Purpose.* The purpose of this standard is to reduce deaths and injuries by minimizing the likelihood of vehicles passing a stopped school bus and striking pedestrians in the vicinity of the bus.

S3. *Application.* This standard applies to school buses other than multi-function school activity buses.

S4. *Definitions.*

Stop signal arm means a device that can be extended outward from the side of a school bus to provide a signal to other motorists not to pass the bus because it has stopped to load or discharge passengers.

S5. *Requirements.* Each school bus shall be equipped with a stop signal arm meeting the requirements of S5.1 through S5.5 as depicted in Figure 1.

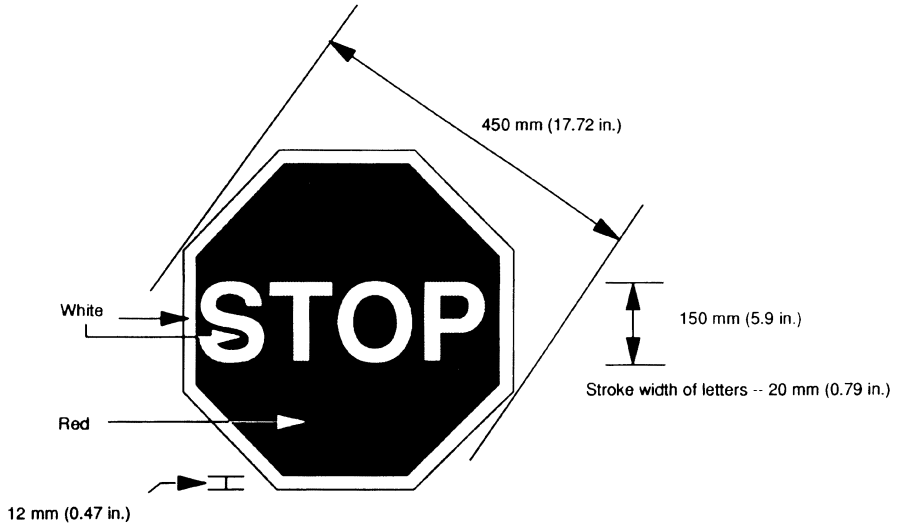

Figure 1. Characteristics of Stop Signal Device

S5.1 The stop signal arm shall be a regular octagon which is at least 450 mm×450 mm (17.72 inches×17.72 inches) in diameter.

S5.2 The stop signal arm shall be red on both sides, except as provided in S5.2.1 and S5.2.2, and S5.2.3.

S5.2.1 The stop signal arm shall have a white border at least 12 mm (0.47 inches) wide on both sides, except as provided in S5.2.3. Mounting brackets, clips, bolts, or other components necessary to the mechanical or electrical operation of the stop signal arm may not obscure more than 15 percent of the border on each side of the stop arm. The portion of the border that may be obscured is in addition to that portion which may be obscured by the two red lamps specified in S5.3.2.

S.5.2.2 The stop signal arm shall have the word ''STOP'' displayed in white upper-case letters on both sides, except as provided in S5.2.3. The letters shall be at least 150 mm (5.9 inches) in height. The letters shall have a stroke width of at least 20 mm (0.79 inches), except as provided in S.5.3.1.1.

S5.2.3 When two stop signal arms are installed on a school bus, the rearmost stop signal arm shall not contain any lettering, symbols, or markings on the forward side.

S5.3 *Conspicuity*. The stop signal arm shall comply with either S5.3.1 or S5.3.2, or both.

S5.3.1 Except as provided in S5.3.1.1, S5.3.1.2, or S5.3.1.3, the entire surface of both sides of each stop signal arm shall be reflectorized with Type III retroreflectorized material that meets the minimum specific intensity requirements of S6.1 and Table I.

S.5.3.1.1 The legend of the retroreflective stop arm may be illuminated in a manner such that light is emitted from the surface of each letter or from the area immediately surrounding each letter. Only red lamps may be used. They shall form the complete shape of each letter of the legend, and shall be affixed to all letters (or to the areas immediately surrounding all letters) in the legend. The shape of each letter shall remain constant and, if the lamps are contained within each letter, the net stroke width (stroke width minus the width of the lamp(s)) of each letter of the legend, specified in S5.2.2, shall not be less than 15 mm (0.59 inch). When the stop arm is extended, the lamps shall flash at the rate specified in S6.2.2, with a current ''on'' time specified in S6.2.2.1. All lamps shall be positioned in one of the two following ways:

(1) centered within the stroke of each letter of the legend, or

(2) outlining each letter of the legend.

S5.3.1.2 Nonreflectorized mounting brackets, clips, bolts, or other components necessary to the mechanical or electrical operation of the stop signal arm shall not obscure more than 7.5 percent of the total surface area of either side of the stop signal arm.

S5.3.1.3 When two stop signal arms are installed on a school bus, the forward side of the rearmost stop signal arm shall not be reflectorized.

S5.3.2 Each side of the stop signal arm shall have at least two red lamps that meet the requirements of S6.2. The lamps shall be centered on the vertical centerline of the stop arm. One of the lamps shall be located at the extreme top of the stop arm and the other at its extreme bottom.

S5.4 The stop signal arm shall be installed on the left side of the bus.

S5.4.1 The stop signal arm shall be located such that, when in the extended position:

(a) The stop signal arm is perpendicular to the side of the bus, plus or minus five degrees;

(b) The top edge of the stop signal arm is parallel to and not more than 6 inches from a horizontal plane tangent to the lower edge of the frame of the passenger window immediately behind the driver's window; and

(c) The vertical centerline of the stop signal arm is not less than 9 inches away from the side of the school bus.

S5.4.2 A second stop signal arm may be installed on a school bus. That stop signal arm shall comply with S5.4 and S5.4.1.

S5.5 The stop signal arm shall be automatically extended in such a manner that it complies with S5.4.1, at a minimum whenever the red signal lamps required by S5.1.4 of Standard No. 108 are activated; except that a device may be installed that prevents the automatic extension of a stop signal arm. The mechanism for activating the device shall be within the reach of the driver. While the device is activated, a continuous or intermittent signal audible to the driver shall sound. The audible signal may be equipped with a timing device requiring the signal to sound for at least 60 seconds. If a timing device is used, it shall automatically recycle every time the service entry door is opened while the engine is running and the manual override is engaged.

S6 *Test Procedures*.

S6.1 *Reflectivity Test*. When tested under the conditions specified in S6.2 (b), (c), and (d) of Federal motor vehicle safety standard 125, Warning Devices, (49 CFR 571.125), the retroreflective materials shall meet the criteria specified in table 1.

TABLE 1—MINIMUM SPECIFIC INTENSITY PER UNIT AREA (SIA)

(Candelas per Footcandle Per Square Foot)

Observation Angle (°)	Entrance Angle (°)	White	Red
Type III Retroreflective Element Material			
A—Glass Bead Retroreflective Element Material			
0.2	−4	250	45
0.2	+30	150	25
0.5	−4	95	15
0.5	+30	65	10
B—Prismatic Retroreflective Element Material			
0.2	−4	250	45
0.2	+30	95	13.3
0.5	−4	200	28
0.5	+30	65	10

S6.2 *Lighting Tests*.

S6.2.1 *Color*. The procedure shall be done in accordance with the Society of Automotive Engineers (SAE) J578, Color Specification (May 1988), 1990 SAE Handbook, Society of Automotive Engineers, Inc. Along with the incorporation by reference in S6.2.3, this incorporation by reference was approved by the Director of the Federal Register in accordance with 5 U.S.C. 552(a) and 1 CFR part 51. Copies may be obtained from the Society of Automotive Engineers, 400 Commonwealth Drive, Warrendale, PA 15096–0001. Copies may be inspected at Docket Room, National Highway Traffic Safety Administration, 400 Seventh Street, SW., Washington, DC 20590 or at the National Archives and Records Administration (NARA). For information on the availability of this material at NARA, call 202–741–6030, or go to: *http://www.archives.gov/federal_register/code_of_federal_regulations/ibr_locations.html*. When visually compared to the light emitted from a filter/source with a combination of chromaticity coordinates as explained in SAE J578, Color Specification (May 1988), within specific boundaries [y=0.33 (yellow boundary) and y=0.98—×(purple boundary)] the color of light emitted from the test object shall not be less saturated (paler), yellower, or purpler. The test object shall be placed perpendicular to the light source to simulate lamps on stop signal arms. In making visual comparisons, the light from the test object shall light one portion of a comparison field and the light from the filter/source standard shall light an adjacent area. To make a valid visual comparison, the two fields to be viewed shall be of near equal luminance.

S6.2.2. *Flash rate*. The lamps on each side of the stop signal arm, when operated at the manufacturer's design load, shall flash alternately at a rate of 60 to 120 flashes per minute.

S6.2.2.1 Lamps, except those subject to S6.2.2.2, shall have a current ''on'' time of 30 to 75 percent of the total flash cycle. The total current ''on'' time for the two terminals shall be between 90 and 110 percent of the total flash cycle.

S6.2.2.2 Xenon short-arc gaseous discharge lamps shall have an ''off'' time before each flash of at least 50 percent of the total flash cycle.

S6.2.3 *Vibration, Moisture, Dust, Corrosion, Photometry, and Warpage Tests*. The procedure shall be done in accordance with the Society of Automotive Engineers (SAE) J575, Tests for Motor Vehicle Lighting Devices and Components, (July 1983) and Society of Automotive Engineers (SAE) J1133, School Bus Stop Arm, (April 1984), 1990 SAE Handbook, Society of Automotive Engineers, Inc. Lamps and lighting components shall meet the criteria for vibration, moisture, dust, corrosion, photometry, and warpage in SAE J575, Tests for Motor Vehicle Lighting Devices and Components, (July 1983) and SAE J1133, School Bus Stop Arm, (April 1984) under the test conditions specified herein.

[56 FR 20370, May 3, 1991, as amended at 57 FR 40134, Sept. 2, 1992; 59 FR 26761, May 24, 1994; 63 FR 29143, May 28, 1998; 68 FR 44901, July 31, 2003]

§571.135 Standard No. 135; Light vehicle brake systems.

S1. *Scope*. This standard specifies requirements for service brake and associated parking brake systems.

S2. *Purpose*. The purpose of this standard is to ensure safe braking performance under normal and emergency driving conditions.

S3. Application. This standard applies to passenger cars manufactured on or after September 1, 2000 and to multi-purpose passenger vehicles, trucks and buses with a gross vehicle

inch) of shoe or pad mounting surface on bonded linings or (3) the limit recommended by the manufacturer, whichever is larger relative to the total possible shoe or pad movement. Drums or rotors are assumed to be at nominal design drum diameter or rotor thickness. Linings are assumed adjusted for normal operating clearance in the released position.

(d) The brake system indicators, for compliance with operation in various key positions, lens color, labeling, and location, in accordance with S5.5.

[60 FR 6434, Feb. 2, 1995; as amended at 60 FR 37847, July 24, 1995; 60 FR 44548, Aug. 28, 1995; 62 FR 46917, Sept. 5, 1997; 62 FR 51070, Sept. 30, 1997; 65 FR 6332, Feb. 9, 2000; 70 FR 37713, June 30, 2005]

§571.138 Standard No. 138; Tire pressure monitoring systems.

S1 *Purpose and scope*. This standard specifies performance requirements for tire pressure monitoring systems (TPMSs) to warn drivers of significant under-inflation of tires and the resulting safety problems.

S2 *Application*. This standard applies to passenger cars, multipurpose passenger vehicles, trucks, and buses that have a gross vehicle weight rating of 4,536 kilograms (10,000 pounds) or less, except those vehicles with dual wheels on an axle, according to the phase-in schedule specified in S7 of this standard.

S3 *Definitions*. The following definitions apply to this standard:

Lightly loaded vehicle weight means unloaded vehicle weight plus the weight of a mass of 180 kg (396 pounds), including test driver and instrumentation.

Tire pressure monitoring system means a system that detects when one or more of a vehicle's tires is significantly under-inflated and illuminates a low tire pressure warning telltale.

Vehicle Placard and *Tire inflation pressure label* mean the sources of information for the vehicle manufacturer's recommended cold tire inflation pressure pursuant to §571.110 of this Part.

S4 *Requirements*.

S4.1 *General*. To the extent provided in S7, each vehicle must be equipped with a tire pressure monitoring system that meets the requirements specified in S4 under the test conditions specified in S5 and the test procedures specified in S6 of this standard.

S4.2 *TPMS detection requirements*. The tire pressure monitoring system must:

(a) Illuminate a low tire pressure warning telltale not more than 20 minutes after the inflation pressure in one or more of the vehicle's tires, up to a total of four tires, is equal to or less than either the pressure 25 percent below the vehicle manufacturer's recommended cold inflation pressure, or the pressure specified in the 3rd column of Table 1 of this standard for the corresponding type of tire, whichever is higher;

(b) Continue to illuminate the low tire pressure warning telltale as long as the pressure in any of the vehicle's tires is equal to or less than the pressure specified in S4.2(a), and the ignition locking system is in the ''On'' (''Run'') position, whether or not the engine is running, or until manually reset in accordance with the vehicle manufacturer's instructions.

S4.3 *Low tire pressure warning telltale*.

S4.3.1 Each tire pressure monitoring system must include a low tire pressure warning telltale that:

(a) Is mounted inside the occupant compartment in front of and in clear view of the driver;

(b) Is identified by one of the symbols shown for the ''Low Tire Pressure'' Telltale in Table 1 of Standard No. 101 (49 CFR 571.101); and

(c) Is illuminated under the conditions specified in S4.2.

S4.3.2 In the case of a telltale that identifies which tire(s) is (are) under-inflated, each tire in the symbol for that telltale must illuminate when the tire it represents is under-inflated to the extent specified in S4.2.

S4.3.3 (a) Except as provided in paragraph (b) of this section, each low tire pressure warning telltale must illuminate as a check of lamp function either when the ignition locking system is activated to the ''On'' (''Run'') position when the engine is not running, or when the ignition locking system is in a position between ''On'' (''Run'') and ''Start'' that is designated

by the manufacturer as a check position.

(b) The low tire pressure warning telltale need not illuminate when a starter interlock is in operation.

S4.4 *TPMS malfunction.*

(a) The vehicle shall be equipped with a tire pressure monitoring system that includes a telltale that provides a warning to the driver not more than 20 minutes after the occurrence of a malfunction that affects the generation or transmission of control or response signals in the vehicle's tire pressure monitoring system. The vehicle's TPMS malfunction indicator shall meet the requirements of either S4.4(b) or S4.4(c).

(b) *Dedicated TPMS malfunction telltale.* The vehicle meets the requirements of S4.4(a) when equipped with a dedicated TPMS malfunction telltale that:

(1) Is mounted inside the occupant compartment in front of and in clear view of the driver;

(2) Is identified by the word ''TPMS'' as described under the ''Tire Pressure Monitoring System Malfunction'' Telltale in Table 1 of Standard No. 101 (49 CFR 571.101);

(3) Continues to illuminate the TPMS malfunction telltale under the conditions specified in S4.4(a) for as long as the malfunction exists, whenever the ignition locking system is in the ''On'' (''Run'') position; and

(4) (i) Except as provided in paragraph (ii), each dedicated TPMS malfunction telltale must be activated as a check of lamp function either when the ignition locking system is activated to the ''On'' (''Run'') position when the engine is not running, or when the ignition locking system is in a position between ''On'' (''Run'') and ''Start'' that is designated by the manufacturer as a check position.

(ii) The dedicated TPMS malfunction telltale need not be activated when a starter interlock is in operation.

(c) *Combination low tire pressure/TPMS malfunction telltale.* The vehicle meets the requirements of S4.4(a) when equipped with a combined Low Tire Pressure/TPMS malfunction telltale that:

(1) Meets the requirements of S4.2 and S4.3; and

(2) Flashes for a period of at least 60 seconds but no longer than 90 seconds upon detection of any condition specified in S4.4(a) after the ignition locking system is activated to the ''On'' (''Run'') position. After each period of prescribed flashing, the telltale must remain continuously illuminated as long as a malfunction exists and the ignition locking system is in the ''On'' (''Run'') position. This flashing and illumination sequence must be repeated each time the ignition locking system is placed in the ''On'' (''Run'') position until the situation causing the malfunction has been corrected. Multiple malfunctions occurring during any ignition cycle may, but are not required to, reinitiate the prescribed flashing sequence.

S4.5 *Written instructions.*

(a) Beginning on September 1, 2006, the owner's manual in each vehicle certified as complying with S4 must provide an image of the Low Tire Pressure Telltale symbol (and an image of the TPMS Malfunction Telltale warning (''TPMS''), if a dedicated telltale is utilized for this function) with the following statement in English:

Each tire, including the spare (if provided), should be checked monthly when cold and inflated to the inflation pressure recommended by the vehicle manufacturer on the vehicle placard or tire inflation pressure label. (If your vehicle has tires of a different size than the size indicated on the vehicle placard or tire inflation pressure label, you should determine the proper tire inflation pressure for those tires.)

As an added safety feature, your vehicle has been equipped with a tire pressure monitoring system (TPMS) that illuminates a low tire pressure telltale when one or more of your tires is significantly under-inflated. Accordingly, when the low tire pressure telltale illuminates, you should stop and check your tires as soon as possible, and inflate them to the proper pressure. Driving on a significantly under-inflated tire causes the tire to overheat and can lead to tire failure. Under-inflation also reduces fuel efficiency and tire tread life, and may affect the vehicle's handling and stopping ability.

Please note that the TPMS is not a substitute for proper tire maintenance, and it is the driver's responsibility to maintain correct tire pressure, even if under-inflation has not reached the level to trigger illumination of the TPMS low tire pressure telltale.

[The following paragraph is required for all vehicles certified to the standard starting on

September 1, 2007 and for vehicles voluntarily equipped with a compliant TPMS MIL before that time.] Your vehicle has also been equipped with a TPMS malfunction indicator to indicate when the system is not operating properly. [For vehicles with a dedicated MIL telltale, add the following statement: The TPMS malfunction indicator is provided by a separate telltale, which displays the symbol ''TPMS'' when illuminated.] [For vehicles with a combined low tire pressure/MIL telltale, add the following statement: The TPMS malfunction indicator is combined with the low tire pressure telltale. When the system detects a malfunction, the telltale will flash for approximately one minute and then remain continuously illuminated. This sequence will continue upon subsequent vehicle start-ups as long as the malfunction exists.] When the malfunction indicator is illuminated, the system may not be able to detect or signal low tire pressure as intended. TPMS malfunctions may occur for a variety of reasons, including the installation of replacement or alternate tires or wheels on the vehicle that prevent the TPMS from functioning properly. Always check the TPMS malfunction telltale after replacing one or more tires or wheels on your vehicle to ensure that the replacement or alternate tires and wheels allow the TPMS to continue to function properly.

(b) The owner's manual may include additional information about the time for the TPMS telltale(s) to extinguish once the low tire pressure condition or the malfunction is corrected. It may also include additional information about the significance of the low tire pressure warning telltale illuminating, a description of corrective action to be undertaken, whether the tire pressure monitoring system functions with the vehicle's spare tire (if provided), and how to use a reset button, if one is provided.

(c) If a vehicle does not come with an owner's manual, the required information shall be provided in writing to the first purchaser of the vehicle.

S5 *Test conditions.*

S5.1 *Ambient temperature.* The ambient temperature is between 0 °C (32 °F) and 40 °C (104 °F).

S5.2 *Road test surface.* Compliance testing is conducted on any portion of the Southern Loop of the Treadwear Test Course defined in Appendix A and Figure 2 of section 575.104 of this chapter. The road surface is dry during testing.

S5.3 *Vehicle conditions.*

S5.3.1 *Test weight.* The vehicle may be tested at any weight between its lightly loaded vehicle weight and its gross vehicle weight rating (GVWR) without exceeding any of its gross axle weight ratings.

S5.3.2 *Vehicle speed.* The vehicle's TPMS is calibrated and tested at speeds between 50 km/h (31.1 mph) and 100 km/h (62.2 mph). For vehicles equipped with cruise control, cruise control is not to be engaged during testing.

S5.3.3 *Rim position.* The vehicle rims may be positioned at any wheel position, consistent with any related instructions or limitations in the vehicle owner's manual.

S5.3.4 *Stationary location.* The vehicle's tires are shaded from direct sun when the vehicle is parked.

S5.3.5 *Brake pedal application.* Driving time shall not accumulate during service brake application.

S5.3.6 *Range of conditions or test parameters.* Whenever a range of conditions or test parameters is specified in this standard, the vehicle must meet applicable requirements when tested at any point within the range.

S5.3.7 *Tires.* The vehicle is tested with the tires installed on the vehicle at the time of initial vehicle sale, excluding the spare tire (if provided). However, the spare tire may be utilized for TPMS malfunction testing purposes.

S6 *Test procedures.*

(a) Inflate the vehicle's tires to the cold tire inflation pressure(s) provided on the vehicle placard or the tire inflation pressure label.

(b) With the vehicle stationary and the ignition locking system in the ''Lock'' or ''Off'' position, activate the ignition locking system to the ''On'' (''Run'') position or, where applicable, the appropriate position for the lamp check. The tire pressure monitoring system must perform a check of lamp function for the low tire pressure telltale as specified in paragraph S4.3.3 of this standard. If the vehicle is equipped with a separate TPMS malfunction telltale, the tire pressure monitoring system also must perform a check of lamp function as specified in paragraph S4.4(b)(4) of this standard.

(c) If applicable, set or reset the tire pressure monitoring system in accordance with the instructions in the vehicle owner's manual.

(d) *System calibration/learning phase.*

(1) Drive the vehicle for up to 15 minutes of cumulative time (not necessarily continuously) along any portion of the test course.

(2) Reverse direction on the course and drive the vehicle for an additional period of time for a total cumulative time of 20 minutes (including the time in S6(d)(1), and not necessarily continuously).

(e) Stop the vehicle and deflate any combination of one to four tires until the deflated tire(s) is (are) at 7 kPa (1 psi) below the inflation pressure at which the tire pressure monitoring system is required to illuminate the low tire pressure warning telltale.

(f) *System detection phase.*

(1) Within 5 minutes of reducing the inflation pressure in the tire(s), drive the vehicle for up to 10–15 minutes of cumulative time (not necessarily continuously) along any portion of the test course.

(2) Reverse direction on the course and drive the vehicle for an additional period of time for a total cumulative time of 20 minutes (including the time in S6(f)(1), and not necessarily continuously).

(3) The sum of the total cumulative drive time under paragraphs S6(f)(1) and (2) shall be the lesser of 20 minutes or the time at which the low tire pressure telltale illuminates.

(4) If the low tire pressure telltale did not illuminate, discontinue the test.

(g) If the low tire pressure telltale illuminated during the procedure in paragraph S6(f), deactivate the ignition locking system to the ''Off'' or ''Lock'' position. After a 5-minute period, activate the vehicle's ignition locking system to the ''On'' (''Run'') position. The telltale must illuminate and remain illuminated as long as the ignition locking system is in the ''On'' (''Run'') position.

(h) Keep the vehicle stationary for a period of up to one hour with the engine off.

(i) Inflate all of the vehicle's tires to the same inflation pressure used in paragraph S6(a). If the vehicle's tire pressure monitoring system has a manual reset feature, reset the system in accordance with the instructions specified in the vehicle owner's manual. Determine whether the telltale has extinguished. If necessary, drive the vehicle until the telltale has been extinguished.

(j) The test may be repeated, using the test procedures in paragraphs S6(a)–(b) and S6(d)–(i), with any one, two, three, or four of the tires on the vehicle under-inflated.

(k) Simulate one TPMS malfunction by disconnecting the power source to any TPMS component, disconnecting any electrical connection between TPMS components, or installing a tire or wheel on the vehicle that is incompatible with the TPMS. When simulating a TPMS malfunction, the electrical connections for the telltale lamps are not to be disconnected.

(l) *TPMS malfunction detection.*

(1) Drive the vehicle for up to 15 minutes of cumulative time (not necessarily continuously) along any portion of the test course.

(2) Reverse direction on the course and drive the vehicle for an additional period of time for a total cumulative time of 20 minutes (including the time in S6(l)(1), and not necessarily continuously).

(3) The sum of the total cumulative drive time under paragraphs S6(l)(1) and (2) shall be the lesser of 20 minutes or the time at which the TPMS malfunction telltale illuminates.

(4) If the TPMS malfunction indicator did not illuminate in accordance with paragraph S4.4, as required, discontinue the test.

(m) If the TPMS malfunction indicator illuminated during the procedure in paragraph S6(l), deactivate the ignition locking system to the ''Off'' or ''Lock'' position. After a 5-minute period, activate the vehicle's ignition locking system to the ''On'' (''Run'') position. The TPMS malfunction indicator must again signal a malfunction and remain illuminated as long as the ignition locking system is in the ''On'' (''Run'') position.

(n) Restore the TPMS to normal operation. If necessary, drive the vehicle until the telltale has extinguished.

(o) The test may be repeated using the test procedures in paragraphs S6(k)–(n), with each such test limited to simulation of a single malfunction.

S7 *Phase-in schedule.*

S7.1 *Vehicles manufactured on or after October 5, 2005, and before September 1, 2006.* For vehicles manufactured on or after October 5, 2005, and before September 1, 2006, the number of vehicles complying with this standard (except for the provisions of S4.4 unless the manufacturer elects to also certify to those provisions) must not be less than 20 percent of:

(a) The manufacturer's average annual production of vehicles manufactured on or after September 1, 2002, and before October 5, 2005; or

(b) The manufacturer's production on or after October 5, 2005, and before September 1, 2006.

S7.2 *Vehicles manufactured on or after September 1, 2006, and before September 1, 2007.* For vehicles manufactured on or after September 1, 2006, and before September 1, 2007, the number of vehicles complying with this standard (except for the provisions of S4.4 unless the manufacturer elects to also certify to those provisions) must not be less than 70 percent of:

(a) The manufacturer's average annual production of vehicles manufactured on or after September 1, 2003, and before September 1, 2006; or

(b) The manufacturer's production on or after September 1, 2006, and before September 1, 2007.

S7.3 *Vehicles manufactured on or after September 1, 2007.* Except as provided in S7.7, all vehicles manufactured on or after September 1, 2007 must comply with all requirements of this standard.

S7.4 *Calculation of complying vehicles.*

(a) *Carry-Forward Credits.* For purposes of complying with S7.1, a manufacturer may count a vehicle if it is certified as complying with this standard and is manufactured on or after April 8, 2005, but before September 1, 2006.

(b) For purposes of complying with S7.2, a manufacturer may count a vehicle if it:

(1) (i) Is certified as complying with this standard and is manufactured on or after April 8, 2005, but before September 1, 2007; and

(ii) Is not counted toward compliance with S7.1; or

(2) Is manufactured on or after September 1, 2006, but before September 1, 2007.

(c) *Carry-Backward Credits.* At the vehicle manufacturer's option, for purposes of complying with S7.1, a manufacturer may count a vehicle it plans to manufacture and to certify as complying with this standard that will be produced on or after September 1, 2006 but before September 1, 2007. However, a vehicle counted toward compliance with S7.1 may not be counted toward compliance with S7.2. If the vehicle manufacturer decides to exercise the option for carry-backward credits, the manufacturer must indicate this in its report for the production period corresponding to S7.1 filed pursuant to 49 CFR 585.66. The vehicles are counted in fulfillment of the requirements of S7.1, subject to actually being produced in compliance with this standard during the specified time period and not being counted toward the requirements of S7.2.

S7.5 *Vehicles produced by more than one manufacturer.*

S7.5.1 For the purpose of calculating average annual production of vehicles for each manufacturer and the number of vehicles manufactured by each manufacturer under S7.1 through S7.3, a vehicle produced by more than one manufacturer must be attributed to a single manufacturer as follows, subject to S7.5.2:

(a) A vehicle that is imported must be attributed to the importer.

(b) A vehicle manufactured in the United States by more than one manufacturer, one of which also markets the vehicle, must be attributed to the manufacturer that markets the vehicle.

S7.5.2 A vehicle produced by more than one manufacturer must be attributed to any one of the vehicle's manufacturers specified by an express written contract, reported to the National Highway Traffic Safety Administration under 49 CFR Part 585, between the manufacturer so specified and the manufacturer to which the vehicle would otherwise be attributed under S7.5.1.

S7.6 *Small volume manufacturers.* Vehicles manufactured by a manufacturer that produces fewer than 5,000 vehicles

for sale in the United States during the period of September 1, 2005 to August 31, 2006, or the period from September 1, 2006 to August 31, 2007, are not subject to the corresponding requirements of S7.1, S7.2, and S7.4.

S7.7 *Final-stage manufacturers and alterers*. Vehicles that are manufactured in two or more stages or that are altered (within the meaning of 49 CFR 567.7) after having previously been certified in accordance with Part 567 of this chapter are not subject to the requirements of S7.1 through S7.4. Instead, vehicles that are manufactured in two or more stages or that are altered must comply with this standard beginning on September 1, 2008.

TABLES TO § 571.138

TABLE 1—LOW TIRE PRESSURE WARNING TELLTALE—MINIMUM ACTIVATION PRESSURE

Column 1—tire type	Column 2—maximum or rated inflation pressure		Column 3—minimum activation pressure	
	(kPa)	(psi)	(kPa)	(psi)
P-metric—Standard Load	240,	35,	140	20
	300, or	44, or	140	20
	350	51	140	20
P-metric—Extra Load	280 or	41 or	160	23
	340	49	160	23
Load Range C	350	51	200	29
Load Range D	450	65	240	35
Load Range E	550	80	240	35

[70 FR 18187, Apr. 8, 2005, as amended at 70 FR 53100, Sept. 7, 2005; 72 FR 38025, July 12, 2007]

§ 571.139 Standard No. 139; New pneumatic radial tires for light vehicles.

S1. *Scope and purpose*. This standard specifies tire dimensions, test requirements, labeling requirements, and defines tire load ratings.

S2 *Application and Incorporation by Reference*.

S2.1 *Application*. This standard applies to new pneumatic radial tires for use on motor vehicles (other than motorcycles and low speed vehicles) that have a gross vehicle weight rating (GVWR) of 10,000 pounds or less and that were manufactured after 1975. This standard does not apply to special tires (ST) for trailers in highway service, tires for use on farm implements (FI) in agricultural service with intermittent highway use, tires with rim diameters of 8 inches and below, or T-type temporary use spare tires with radial construction.

S2.2 Incorporation by reference. ASTM F–1805–00, Standard Test Method for Single Wheel Driving Traction in a Straight Line on Snow- and Ice-Covered Surfaces is incorporated by reference in S3 of this section. The Director of the Federal Register has approved the incorporation by reference of this material in accordance with 5 U.S.C. 552(a) and 1 CFR Part 51. A copy of ASTM F–1805–00 may be obtained from the ASTM Web site *http://www.astm.org/* or by contacting ASTM, or by contacting ASTM, 100 Barr Harbor Drive, West Conshohocken, PA 19428–2959. A copy of ASTM F–1805–00 may be obtained from the NHTSA docket at Docket No. 2005–23439, or at the National Archives and Records Administration (NARA). For information on the availability of this material at NARA, call 202–741–6030, or go to: *http://www.archives.gov/federal_register/code_of_federal_regulations/ibr_locations.html*.

S3 *Definitions*.

Bead means the part of the tire that is made of steel wires, wrapped or reinforced by ply cords and that is shaped to fit the rim.

Bead separation means a breakdown of the bond between components in the bead.

Bias ply tire means a pneumatic tire in which the ply cords that extend to the beads are laid at alternate angles substantially less than 90 degrees to the centerline of the tread.

Carcass means the tire structure, except tread and sidewall rubber which, when inflated, bears the load.

Chunking means the breaking away of pieces of the tread or sidewall.

for sale in the United States during the period of September 1, 2005 to August 31, 2006, or the period from September 1, 2006 to August 31, 2007, are not subject to the corresponding requirements of S7.1, S7.2, and S7.4.

S7.7 *Final-stage manufacturers and alterers*. Vehicles that are manufactured in two or more stages or that are altered (within the meaning of 49 CFR 567.7) after having previously been certified in accordance with Part 567 of this chapter are not subject to the requirements of S7.1 through S7.4. Instead, vehicles that are manufactured in two or more stages or that are altered must comply with this standard beginning on September 1, 2008.

TABLES TO § 571.138

TABLE 1—LOW TIRE PRESSURE WARNING TELLTALE—MINIMUM ACTIVATION PRESSURE

Column 1—tire type	Column 2—maximum or rated inflation pressure		Column 3—minimum activation pressure	
	(kPa)	(psi)	(kPa)	(psi)
P-metric—Standard Load	240,	35,	140	20
	300, or	44, or	140	20
	350	51	140	20
P-metric—Extra Load	280 or	41 or	160	23
	340	49	160	23
Load Range C	350	51	200	29
Load Range D	450	65	240	35
Load Range E	550	80	240	35

[70 FR 18187, Apr. 8, 2005, as amended at 70 FR 53100, Sept. 7, 2005; 72 FR 38025, July 12, 2007]

§ 571.139 Standard No. 139; New pneumatic radial tires for light vehicles.

S1. *Scope and purpose*. This standard specifies tire dimensions, test requirements, labeling requirements, and defines tire load ratings.

S2 *Application and Incorporation by Reference*.

S2.1 *Application*. This standard applies to new pneumatic radial tires for use on motor vehicles (other than motorcycles and low speed vehicles) that have a gross vehicle weight rating (GVWR) of 10,000 pounds or less and that were manufactured after 1975. This standard does not apply to special tires (ST) for trailers in highway service, tires for use on farm implements (FI) in agricultural service with intermittent highway use, tires with rim diameters of 8 inches and below, or T-type temporary use spare tires with radial construction.

S2.2 Incorporation by reference. ASTM F–1805–00, Standard Test Method for Single Wheel Driving Traction in a Straight Line on Snow- and Ice-Covered Surfaces is incorporated by reference in S3 of this section. The Director of the Federal Register has approved the incorporation by reference of this material in accordance with 5 U.S.C. 552(a) and 1 CFR Part 51. A copy of ASTM F–1805–00 may be obtained from the ASTM Web site *http://www.astm.org/* or by contacting ASTM, or by contacting ASTM, 100 Barr Harbor Drive, West Conshohocken, PA 19428–2959. A copy of ASTM F–1805–00 may be obtained from the NHTSA docket at Docket No. 2005–23439, or at the National Archives and Records Administration (NARA). For information on the availability of this material at NARA, call 202–741–6030, or go to: *http://www.archives.gov/federal_register/code_of_federal_regulations/ibr_locations.html*.

S3 *Definitions*.

Bead means the part of the tire that is made of steel wires, wrapped or reinforced by ply cords and that is shaped to fit the rim.

Bead separation means a breakdown of the bond between components in the bead.

Bias ply tire means a pneumatic tire in which the ply cords that extend to the beads are laid at alternate angles substantially less than 90 degrees to the centerline of the tread.

Carcass means the tire structure, except tread and sidewall rubber which, when inflated, bears the load.

Chunking means the breaking away of pieces of the tread or sidewall.

Cord means the strands forming the plies in the tire.

Cord separation means the parting of cords from adjacent rubber compounds.

Cracking means any parting within the tread, sidewall, or inner liner of the tire extending to cord material.

Extra load tire means a tire designed to operate at higher loads and higher inflation pressure than the corresponding standard tire.

Groove means the space between two adjacent tread ribs.

Innerliner means the layer(s) forming the inside surface of a tubeless tire that contains the inflating medium within the tire.

Innerliner separation means the parting of the innerliner from cord material in the carcass.

Light truck (LT) tire means a tire designated by its manufacturer as primarily intended for use on lightweight trucks or multipurpose passenger vehicles.

Load rating means the maximum load that a tire is rated to carry for a given inflation pressure.

Maximum load rating means the load rating for a tire at the maximum permissible inflation pressure for that tire.

Maximum permissible inflation pressure means the maximum cold inflation pressure to which a tire may be inflated.

Measuring rim means the rim on which a tire is fitted for physical dimension requirements.

Open splice means any parting at any junction of tread, sidewall, or innerliner that extends to cord material.

Outer diameter means the overall diameter of an inflated new tire.

Overall width means the linear distance between the exteriors of the sidewalls of an inflated tire, including elevations due to labeling, decorations, or protective bands or ribs.

Passenger car tire means a tire intended for use on passenger cars, multipurpose passenger vehicles, and trucks, that have a gross vehicle weight rating (GVWR) of 10,000 pounds or less.

Ply means a layer of rubber-coated parallel cords.

Ply separation means a parting of rubber compound between adjacent plies.

Pneumatic tire means a mechanical device made of rubber, chemicals, fabric and steel or other materials, that, when mounted on an automotive wheel, provides the traction and contains the gas or fluid that sustains the load.

Radial ply tire means a pneumatic tire in which the ply cords that extend to the beads are laid at substantially 90 degrees to the centerline of the tread.

Reinforced tire means a tire designed to operate at higher loads and at higher inflation pressures than the corresponding standard tire.

Rim means a metal support for a tire or a tire and tube assembly upon which the tire beads are seated.

Section width means the linear distance between the exteriors of the sidewalls of an inflated tire, excluding elevations due to labeling, decoration, or protective bands.

Sidewall means that portion of a tire between the tread and bead.

Sidewall separation means the parting of the rubber compound from the cord material in the sidewall.

Test rim means the rim on which a tire is fitted for testing, and may be any rim listed as appropriate for use with that tire.

Tread means that portion of a tire that comes into contact with the road.

Tread rib means a tread section running circumferentially around a tire.

Tread separation means pulling away of the tread from the tire carcass.

Treadwear indicators (TWI) means the projections within the principal grooves designed to give a visual indication of the degrees of wear of the tread.

Wheel-holding fixture means the fixture used to hold the wheel and tire assembly securely during testing.

S4. *Tire and rim matching information.*

S4.1. Each manufacturer of tires must ensure that a listing of the rims that may be used with each tire that it produces is provided to the public in accordance with S4.1.1 and S4.1.2.

S4.1.1 Each rim listing for a tire must include dimensional specifications and a diagram of the rim and must be in one of the following forms:

(a) Listed by manufacturer name or brand name in a document furnished to dealers of the manufacturer's tires, to any person upon request, and in duplicate to: Docket Section, National Highway Traffic Safety Administration, 400 Seventh Street, SW., Washington, DC 20590; or

(b) Contained in publications, current at the date of manufacture of the tire or any later date, of at least one of the following organizations:

(1) The Tire and Rim Association.

(2) The European Tyre and Rim Technical Organization.

(3) Japan Automobile Tire Manufacturers' Association, Inc.

(4) Tyre & Rim Association of Australia.

(5) Associacao Latino Americana de Pneus e Aros (Brazil).

(6) South African Bureau of Standards.

S4.1.2 A listing compiled in accordance with paragraph (a) of S4.1.1 need not include dimensional specifications or a diagram of a rim whose dimensional specifications and diagram are contained in a listing published in accordance with paragraph (b) of S4.1.1.

S4.2. Information contained in a publication specified in S4.1.1(b) that lists general categories of tires and rims by size designation, type of construction, and/or intended use, is considered to be manufacturer's information required by S4.1 for the listed tires, unless the publication itself or specific information provided according to S4.1(a) indicates otherwise.

S5. General requirements

S5.1. Size and construction. Each tire shall fit each rim specified for its size designation in accordance with S4.1.

S5.2. Performance requirements. Each tire shall conform to each of the following:

(a) It shall meet the requirements specified in S6 for its tire size designation, type, and maximum permissible inflation pressure.

(b) It shall meet each of the applicable requirements set forth in paragraphs (c) and (d) of this S5.2, when mounted on a model rim assembly corresponding to any rim designated by the tire manufacturer for use with the tire in accordance with S4.

(c) Its maximum permissible inflation pressure shall be 240, 280, 300, 340, or 350 kPa.

(d) Its load rating shall be that specified either in a submission made by an individual manufacturer, pursuant to S4, or in one of the publications described in S4 for its size designation, type and each appropriate inflation pressure. If the maximum load rating for a particular tire size is shown in more than one of the publications described in S4, each tire of that size designation shall have a maximum load rating that is not less than the published maximum load rating, or if there are differing maximum load ratings for the same tire size designation, not less then the lowest published maximum load rating.

S5.3. Test sample. For the tests specified in S6, use:

(a) One tire for high speed;

(b) Another tire for endurance and low inflation pressure performance; and

(c) A third tire for physical dimensions, resistance to bead unseating, and strength, in sequence.

S5.4. Treadwear indicators. Except in the case of tires with a 12-inch or smaller rim diameter, each tire shall have not less than six treadwear indicators spaced approximately equally around the circumference of the tire that enable a person inspecting the tire to determine visually whether the tire has worn to a tread depth of one sixteenth of an inch. Tires with 12-inch or smaller rim diameter shall have not less than three such treadwear indicators.

S5.5 *Tire markings.* Except as specified in paragraphs (a) through (i) of S5.5, each tire must be marked on each sidewall with the information specified in S5.5(a) through (d) and on one sidewall with the information specified in S5.5(e) through (i) according to the phase-in schedule specified in S7 of this standard. The markings must be placed between the maximum section width and the bead on at least one sidewall, unless the maximum section width of the tire is located in an area that is not more than one-fourth of the distance from the bead to the shoulder of the tire. If the maximum section width falls within that area, those markings

must appear between the bead and a point one-half the distance from the bead to the shoulder of the tire, on at least one sidewall. The markings must be in letters and numerals not less than 0.078 inches high and raised above or sunk below the tire surface not less than 0.015 inches.

S5.5.1 *Tire identification number.*

(a) *Tires manufactured before September 1, 2009.* Each tire must be labeled with the tire identification number required by 49 CFR part 574 on a sidewall of the tire. Except for retreaded tires, either the tire identification number or a partial tire identification number, containing all characters in the tire identification number, except for the date code and, at the discretion of the manufacturer, any optional code, must be labeled on the other sidewall of the tire.

(b) *Tires manufactured on or after September 1, 2009.* Each tire must be labeled with the tire identification number required by 49 CFR part 574 on the intended outboard sidewall of the tire. Except for retreaded tires, either the tire identification number or a partial tire identification number, containing all characters in the tire identification number, except for the date code and, at the discretion of the manufacturer, any optional code, must be labeled on the other sidewall of the tire. Except for retreaded tires, if a tire does not have an intended outboard sidewall, the tire must be labeled with the tire identification number required by 49 CFR part 574 on one sidewall and with either the tire identification number or a partial tire identification number, containing all characters in the tire identification number except for the date code and, at the discretion of the manufacturer, any optional code, on the other sidewall.

S5.5.2 [Reserved]

S5.5.3 Each tire must be labeled with the name of the manufacturer, or brand name and number assigned to the manufacturer in the manner specified in 49 CFR part 574.

S5.5.4 For passenger car tires, if the maximum inflation pressure of a tire is 240, 280, 300, 340, or 350 kPa, then:

(a) Each marking of that inflation pressure pursuant to S5.5(c) must be followed in parenthesis by the equivalent psi, rounded to the next higher whole number; and

(b) Each marking of the tire's maximum load rating pursuant to S5.5(d) in kilograms must be followed in parenthesis by the equivalent load rating in pounds, rounded to the nearest whole number.

S5.5.5 If the maximum inflation pressure of a tire is 420 kPa (60 psi), the tire must have permanently molded into or onto both sidewalls, in letters and numerals not less than ½ inch high, the words ''Inflate to 60 psi'' or ''Inflate to 420 kPa (60 psi).'' On both sidewalls, the words must be positioned in an area between the tire shoulder and the bead of the tire. However, the words must be also positioned on the tire so that they are not obstructed by the flange of any rim designated for use with that tire in this standard or in Standard No. 110 (§571.110 of this part).

S5.5.6 For LT tires, the maximum permissible inflation pressure shown must be the inflation pressure that corresponds to the maximum load of the tire for the tire size as specified in one of the publications described in S4.1.1.(b) of §571.139. At the manufacturer's option, the shown inflation pressure may be as much as 10 psi (69 kPa) greater than the inflation pressure corresponding to the specified maximum load.

S6. Test procedures, conditions and performance requirements. Each tire shall meet all of the applicable requirements of this section when tested according to the conditions and procedures set forth in S5 and S6.1 through S6.7.

S6.1. Tire dimensions

S6.1.1 Test conditions and procedures.

S6.1.1.1 Tire Preparation.

S6.1.1.1.1 Mount the tire on the measuring rim specified by the tire manufacturer or in one of the publications listed in S4.1.1

S6.1.1.1.2 For passenger car tires, inflate to the pressure specified in the following table:

Inflation pressure (kPa)	
Standard	Reinforced
180	220

S6.1.1.1.3 In the case of a LT tire, inflate it to the pressure at maximum load as labeled on sidewall.

S6.1.1.1.4 Condition the assembly at an ambient room temperature of 20 °C to 30 °C for not less than 24 hours.

S6.1.1.1.5 Readjust the tire pressure to that specified in S6.1.1.1.2.

S6.1.1.2 *Test procedure.*

S6.1.1.2.1 Measure the section width and overall width by caliper at six points approximately equally spaced around the circumference of the tire, avoiding measurement of the additional thickness of the special protective ribs or bands. The average of the measurements so obtained are taken as the section width and overall width, respectively.

S6.1.1.2.2 Determine the outer diameter by measuring the maximum circumference of the tire and dividing the figure so obtained by Pi (3.14).

S6.1.2 *Performance Requirements.* The actual section width and overall width for each tire measured in accordance with S6.1.1.2 shall not exceed the section width specified in a submission made by an individual manufacturer, pursuant to S4.1.1(a) or in one of the publications described in S4.1.1(b) for its size designation and type by more than:

(a) (For tires with a maximum permissible inflation pressure of 32, 36, or 40 psi) 7 percent, or

(b) (For tires with a maximum permissible inflation pressure of 240, 280, 300, 340 or 350 kPa) 7 percent or 10 mm (0.4 inches), whichever is larger.

S6.2 High Speed Performance

S6.2.1 Test conditions and procedures.

S6.2.1.1 Preparation of tire.

S6.2.1.1.1 Mount the tire on a test rim and inflate it to the pressure specified for the tire in the following table:

Tire application	Test pressure (kPa)
Passenger car tires	
Standard load	220
Extra load	260
Load Range C	320
Load Range D	410
Load Range E	500
Light truck tires with a nominal cross section > 295 mm (11.5 inches)	
Load Range C	230
Load Range D	320
Load Range E	410

S6.2.1.1.2 Condition the assembly at 32 to 38 °C for not less than 3 hours.

S6.2.1.1.3 Before or after mounting the assembly on a test axle, readjust the tire pressure to that specified in S6.2.1.1.1.

S6.2.1.2 Test procedure.

S6.2.1.2.1 Press the assembly against the outer face of a test drum with a diameter of 1.70 m ± 1%.

S6.2.1.2.2 Apply to the test axle a load equal to 85% of the tire's maximum load carrying capacity.

S6.2.1.2.3 Break-in the tire by running it for 2 hours at 80 km/h.

S6.2.1.2.4 Allow tire to cool to 38° C and readjust inflation pressure to applicable pressure in 6.2.1.1.1 immediately before the test.

S6.2.1.2.5 Throughout the test, the inflation pressure is not corrected and the test load is maintained at the value applied in S6.2.1.2.2.

S6.2.1.2.6 During the test, the ambient temperature, measured at a distance of not less than 150 mm and not more than 1 m from the tire, is maintained at not less than 32 °C or more than 38 °C.

S6.2.1.2.7 The test is conducted, continuously and uninterrupted, for ninety minutes through three thirty-minute consecutive test stages at the following speeds: 140, 150, and 160 km/h.

S6.2.1.2.8 Allow the tire to cool for between 15 minutes and 25 minutes. Measure its inflation pressure. Then, deflate the tire, remove it from the test rim, and inspect it for the conditions specified in S6.2.2(a).

S6.2.2 Performance requirements. When the tire is tested in accordance with S6.2.1:

(a) There shall be no visual evidence of tread, sidewall, ply, cord, innerliner, belt or bead separation, chunking, open splices, cracking, or broken cords.

(b) The tire pressure, when measured at any time between 15 minutes and 25 minutes after the end of the test, shall not be less than 95% of the initial pressure specified in S6.2.1.1.1.

S6.3 Tire Endurance

S6.3.1 Test conditions and procedures.

S6.3.1.1 Preparation of Tire.

S6.3.1.1.1 Mount the tire on a test rim and inflate it to the pressure specified for the tire in the following table:

Tire application	Test pressure (kPa)
Passenger car tires	
Standard load	180
Extra load	220
Load Range C	260
Load Range D	340
Load Range E	410
Light truck tires with a nominal cross section > 295 mm (11.5 inches)	
Load Range C	190
Load Range D	260
Load Range E	340

S6.3.1.1.2 Condition the assembly at 32 to 38 °C for not less than 3 hours.

S6.3.1.1.3 Readjust the pressure to the value specified in S6.3.1.1.1 immediately before testing.

S6.3.1.2 Test Procedure.

S6.3.1.2.1 Mount the assembly on a test axle and press it against the outer face of a smooth wheel having a diameter of 1.70 m ± 1%.

S6.3.1.2.2 During the test, the ambient temperature, at a distance of not less than 150 mm and not more than 1 m from the tire, is maintained at not less than 32 °C or more than 38 °C.

S6.3.1.2.3 Conduct the test, without interruptions, at the test speed of not less than 120 km/h with loads and test periods not less than those shown in the following table. For snow tires, conduct the test at not less than 110 km/h.

Test period	Duration (hours)	Load as a percentage of tire maximum load rating
1	4	85
2	6	90
3	24	100

S6.3.1.2.4 Throughout the test, the inflation pressure is not corrected and the test loads are maintained at the value corresponding to each test period, as shown in the table in S6.3.1.2.3.

S6.3.1.2.5 Allow the tire to cool for between 15 minutes and 25 minutes after running the tire for the time specified in the table in S6.3.1.2.3, measure its inflation pressure. Inspect the tire externally on the test rim for the conditions specified in S6.3.2(a).

S6.3.2 Performance requirements. When the tire is tested in accordance with S6.3.1:

(a) There shall be no visual evidence of tread, sidewall, ply, cord, belt or bead separation, chunking, open splices, cracking or broken cords.

(b) The tire pressure, when measured at any time between 15 minutes and 25 minutes after the end of the test, shall not be less than 95% of the initial pressure specified in S6.3.1.1.1.

S6.4 Low Inflation Pressure Performance

S6.4.1 Test conditions and procedures.

S6.4.1.1 Preparation of tire.

S6.4.1.1.1 This test is conducted following completion of the tire endurance test using the same tire and rim assembly tested in accordance with S6.3 with the tire deflated to the following appropriate pressure:

Tire application	Test pressure (kPa)
Passenger car tires	
Standard load	140
Extra load	160
Load Range C	200
Load Range D	260
Load Range E	320
Light truck tires with a nominal cross section > 295 mm (11.5 inches)	
Load Range C	150
Load Range D	200
Load Range E	260

S6.4.1.1.2 After the tire is deflated to the appropriate test pressure in S6.4.1.1.1 at the completion of the endurance test, condition the assembly at 32 to 38 °C for not less than 2 hours.

S6.4.1.1.3 Before or after mounting the assembly on a test axle, readjust the tire pressure to that specified in S6.4.1.1.1.

S6.4.1.2 Test procedure.

S6.4.1.2.1 The test is conducted for ninety minutes at the end of the test specified in S6.3, continuous and uninterrupted, at a speed of 120 km/h (75 mph). For snow tires, conduct the test at not less than 110 km/h.

S6.4.1.2.2 Press the assembly against the outer face of a test drum with a diameter of 1.70 m + 1%.

S6.4.1.2.3 Apply to the test axle a load equal to 100% of the tire's maximum load carrying capacity.

S6.4.1.2.4 Throughout the test, the inflation pressure is not corrected and the test load is maintained at the initial level.

S6.4.1.2.5 During the test, the ambient temperature, at a distance of not less than 150 mm and not more than 1 m from the tire, is maintained at not less than 32 °C or more than 38 °C.

S6.4.1.2.6 Allow the tire to cool for between 15 minutes and 25 minutes. Measure its inflation pressure. Then, deflate the tire, remove it from the test rim, and inspect it for the conditions specified in S6.4.2(a).

S6.4.2 Performance requirements. When the tire is tested in accordance with S6.4.1:

(a) There shall be no visual evidence of tread, sidewall, ply, cord, innerliner, belt or bead separation, chunking, open splices, cracking, or broken cords, and

(b) The tire pressure, when measured at any time between 15 minutes and 25 minutes after the end of the test, shall not be less than 95% of the initial pressure specified in S6.4.1.1.1.

S6.5 Tire strength.

S6.5.1 *Tire strength for passenger car tires.* Each tire shall comply with the requirements of S5.3 of § 571.109.

S6.5.2 Tire strength for LT tires. Each tire shall comply with the requirements of S7.3 of § 571.119.

S6.6 Tubeless tire bead unseating resistance. Each tire shall comply with the requirements of S5.2 of § 571.109. For light truck tires, the maximum permissible inflation pressure to be used for the bead unseating test is as follows:

Load Range C	260 kPa.
Load Range D	340 kPa.
Load Range E	410 kPa.

For light truck tires with a nominal cross section greater than 295 mm (11.5 inches), the maximum permissible inflation pressure to be used for the bead unseating test is as follows:

Load Range C	190 kPa.
Load Range D	260 kPa.
Load Range E	340 kPa.

S7. *Phase-in schedule for tire markings.*

S7.1 *Tires manufactured on or after September 1, 2005 and before September 1, 2006.* For tires manufactured on or after September 1, 2005 and before September 1, 2006, the number of tires complying with S4, S5.5, S5.5.1, S5.5.2, S5.5.3, S5.5.4, S5.5.5, and S5.5.6 of this standard must be equal to not less than 40% of the manufacturer's production during that period.

S7.2 *Tires manufactured on or after September 1, 2006 and before September 1, 2007.* For tires manufactured on or after September 1, 2006 and before September 1, 2007, the number of tires complying with S4, S5.5, S5.5.1, S5.5.2, S5.5.3, S5.5.4, S5.5.5, and S5.5.6 of this standard must be equal to not less than 70% of the manufacturer's production during that period.

S7.3 *Tires manufactured on or after September 1, 2007.* Each tire must comply with S4, S5.5, S5.5.1, S5.5.2, S5.5.3, S5.5.4, S5.5.5, and S5.5.6 of this standard.

[67 FR 69627, Nov. 18, 2002, as amended at 68 FR 38150, June 26, 2003; 69 FR 31319, June 3, 2004; 71 FR 886, Jan. 6, 2006; 72 FR 49211, Aug. 28, 2007]

§ 571.201 Standard No. 201; Occupant protection in interior impact.

S1. *Purpose and scope.* This standard specifies requirements to afford impact protection for occupants.

S2. *Application.* This standard applies to passenger cars and to multipurpose passenger vehicles, trucks, and buses with a GVWR of 4,536 kilograms or less, except that the requirements of S6 do not apply to buses with a GVWR of more than 3,860 kilograms.

S3. *Definitions.*

A-pillar means any pillar that is entirely forward of a transverse vertical plane passing through the seating reference point of the driver's seat.

Ambulance means a motor vehicle designed exclusively for the purpose of emergency medical care, as evidenced by the presence of a passenger compartment to accommodate emergency medical personnel, one or more patients on litters or cots, and equipment and supplies for emergency care at a location or during transport.

B-pillar means the forwardmost pillar on each side of the vehicle that is, in

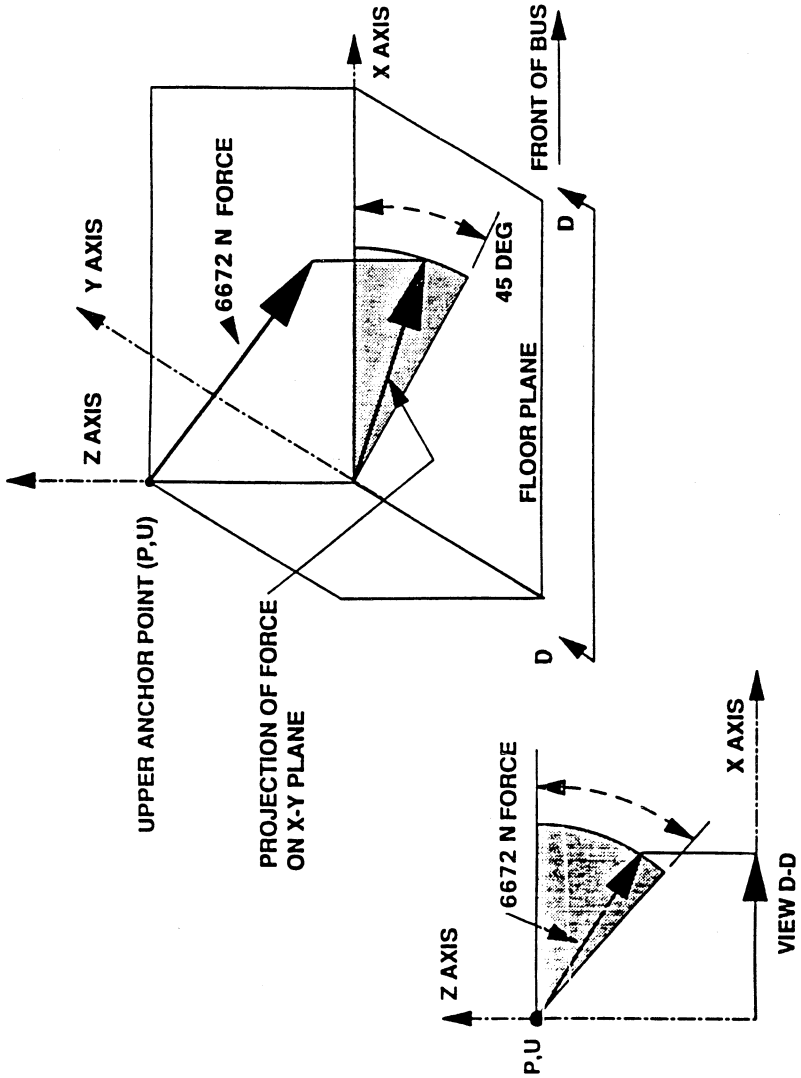

Figure 7. Upper Torso Restraint and Torso Harness Anchorage Loading Location

[41 FR 4018, Jan. 28, 1976, as amended at 41 FR 28528, July 12, 1976; 41 FR 36027, Aug. 26, 1976; 41 FR 54945, Dec. 16, 1976; 42 FR 64120, Dec. 22, 1977; 43 FR 9150, Mar. 6, 1978; 44 FR 18675, Mar. 29, 1979; 48 FR 12386, Mar. 24, 1983; 54 FR 46268, Nov. 2, 1989; 58 FR 4593, Jan. 15, 1993; 58 FR 46876, Sept. 3, 1993; 63 FR 28948, 28950, May 27, 1998]

§ 571.223 Standard No. 223; Rear impact guards.

S1. *Scope.* This standard specifies requirements for rear impact guards for trailers and semitrailers.

S2. *Purpose.* The purpose of this standard is to reduce the number of deaths and serious injuries that occur when light duty vehicles collide with the rear end of trailers and semitrailers.

S3. *Application*. This standard applies to rear impact guards for trailers and semitrailers subject to Federal Motor Safety Standard No. 224, *Rear Impact Protection* (§ 571.224).

S4. *Definitions*.

In this standard, directional terms such as *bottom*, *center*, *height*, *horizontal*, *longitudinal*, *transverse*, and *rear* refer to directions relative to the vehicle orientation when the guard is oriented as if it were installed on a vehicle according to the installation instructions in S5.5 of this section.

Chassis means the load supporting frame structure of a motor vehicle.

Guard width means the maximum horizontal guard dimension that is perpendicular to the longitudinal vertical plane passing through the longitudinal centerline of the vehicle when the guard is installed on the vehicle according to the installation instructions in S5.5 of this section.

Horizontal member means the structural member of the guard that meets the configuration requirements of S5.1.1 through 5.1.3 of § 571.224, Rear Impact Protection, when the guard is installed on a vehicle according to the guard manufacturer's installation instructions.

Hydraulic guard means a guard designed to use fluid properties to provide resistance force to deformation.

Rear impact guard means a device installed on or near the rear of a vehicle so that when the vehicle is struck from the rear, the device limits the distance that the striking vehicle's front end slides under the rear end of the impacted vehicle.

Rigid test fixture means a supporting structure on which a rear impact guard can be mounted in the same manner it is mounted to a vehicle. The rigid test fixture is designed to resist the forces applied to the rear impact guard without significant deformation, such that a performance requirement of this standard must be met no matter how small an amount of energy is absorbed by the rigid test fixture.

S5. Requirements.

S5.1 *Projected Vertical Height*. The horizontal member of each guard, when viewed from the rear as it would be installed on a trailer pursuant to the installation instructions or procedures required by S5.5 of this standard, shall have a vertical height of at least 100 mm at each point across the guard width, when projected horizontally on a transverse vertical plane. Those installation instructions or procedures shall specify that the guard is to be mounted so that all portions of the horizontal member necessary to achieve a 100 mm high projected vertical height are located not more than 305 mm forward of the vehicle's rear extremity, as defined in S4 of 49 CFR 571.224, Rear Impact Protection. See Figure 1 of this section.

S5.2 *Strength and Energy Absorption*. When tested under the procedures of S6 of this section, each guard shall comply with the strength requirements of S5.2.1 of this section at each test location and the energy absorption requirements of S5.2.2 of this section at test location P3, as specified in S6.4 of this section. However, a particular guard (i.e., test specimen) need not be tested at more than one location.

S5.2.1 *Guard Strength*. The guard must resist the force levels specified in S5.2.1 (a) through (c) of this section without deflecting by more than 125 mm.

(a) A force of 50,000 N at test location P1 on either the left or the right side of the guard as defined in S6.4(a) of this section.

(b) A force of 50,000 N at test location P2 as defined in S6.4(b) of this section.

(c) A force of 100,000 N at test location P3 on either the left or the right side of the guard as defined in S6.4(c) of this section.

S5.2.2 *Guard Energy Absorption*. A guard, other than a hydraulic guard, shall absorb by plastic deformation within the first 125 mm of deflection at least 5,650 J of energy at each test location P3. See Figure 2 of this section.

S5.3 *Labeling*. Each guard shall be permanently labeled with the information specified in S5.3 (a) through (c) of this section. The information shall be in English and in letters that are at least 2.5 mm high. The label shall be placed on the forward or rearward facing surface of the horizontal member of the guard, provided that the label does not interfere with the retroreflective sheeting required by S5.7.1.4.1(c) of FMVSS No. 108 (49 CFR 571.108), and is readily accessible for visual inspection.

(a) The guard manufacturer's name and address.

(b) The statement: ''Manufactured in _____'' (inserting the month and year of guard manufacture).

(c) The letters ''DOT'', constituting a certification by the guard manufacturer that the guard conforms to all requirements of this standard.

S5.4 *Guard Attachment Hardware.* Each guard, other than a guard that is to be installed on a vehicle manufactured by the manufacturer of the guard, shall be accompanied by all attachment hardware necessary for installation of the guard on the chassis of the motor vehicle for which it is intended.

S5.5 *Installation Instructions.* The manufacturer of rear impact guards for sale to vehicle manufacturers shall include with each guard printed instructions in English for installing the guard, as well as a diagram or schematic depicting proper guard installation. The manufacturer of a rear impact guard for one of its own vehicles shall prepare and keep a copy of installation procedures applicable to each vehicle/guard combination for a period of one year from the date of vehicle manufacture and provide them to NHTSA on request. The instructions or procedures shall specify:

(a) Vehicles on which the guard can be installed. Vehicles may be designated by listing the make and model of the vehicles for which the guard is suitable, or by specifying the design elements that would make any vehicle an appropriate host for the particular guard (e.g., vehicles with frame rails of certain spacing and gauge of steel).

(b) A description of the chassis surface to which the guard will be attached, including frame design types with dimensions, material thickness, and tire track width. This description shall be detailed enough to permit the agency to locate and duplicate the chassis surface during compliance testing.

(c) An explanation of the method of attaching the guard to the chassis of each vehicle make and model listed or to the design elements specified in the instructions or procedures. The principal aspects of vehicle chassis configuration that are necessary to the proper functioning of the guard shall be specified. If the chassis strength is inadequate for the guard design, the instructions or procedures shall specify methods for adequately reinforcing the vehicle chassis. Procedures for properly installing any guard attachment hardware shall be provided.

S6. *Guard Test Procedures.* The procedures for determining compliance with S5.2 of this section are specified in S6.1 through S6.6 of this section.

S6.1 *Preparation of Hydraulic Guards.* For hydraulic guards, the horizontal member of the guard is deflected in a forward direction until the hydraulic unit(s) have reached the full extent of their designed travel or 610 mm, whichever occurs first. The hydraulic units are compressed before the application of force to the guard in accordance with S6.6 of this section and maintained in this condition throughout the testing under S6.6 of this section.

S6.2 *Guard Installation for Strength and Energy Absorption Tests.*

(a) The rear impact guard is attached to a test device.

(b) The test device for the compliance test will be whichever of the following devices, if either was used, the manufacturer used as a basis for its certification of the guard in S5.3(c) of this section. If the manufacturer did not use one of these devices or does not specify a device when asked by the agency, the agency may choose either of the following devices—

(1) A rigid test fixture. In the case of testing on a rigid test fixture NHTSA will consult the installation instructions or procedures to determine the surface or structure that the guard is supposed to be mounted to and mount it to the rigid test fixture in the same way.

(2) A complete trailer for which installation of the guard is suitable, as provided in the manufacturer's installation instructions or procedures required by S5.5 of this section. The trailer chassis is secured so that it behaves essentially as a fixed object during the test, such that the test must be passed no matter how little it moves during the test.

(c) The guard is attached in accordance with the instructions or procedures for guard attachment provided

by the guard manufacturer for that guard as required by S5.5 of this section.

S6.3 *Force Application Device*. The force application device employed in S6.6 of this section consists of a rectangular solid made of rigid steel. The steel solid is 203 mm in height, 203 mm in width, and 25 mm in thickness. The 203 mm by 203 mm face of the block is used as the contact surface for application of the forces specified in S5.2.1 (a) through (c) of this section. Each edge of the contact surface of the block has a radius of curvature of 5 mm plus or minus 1 mm.

S6.4 *Test Locations*. With the guard mounted to the rigid test fixture or to a complete trailer, determine the test locations P1, P2, and P3 in accordance with the procedure set forth in S6.4 (a) through (c) of this section. See Figure 1 of this section.

(a) Test location P1 is the point on the rearmost surface of the horizontal member of the guard that:

(1) Is located at a distance of ⅜ of the guard width from the vertical longitudinal plane passing through center of the guard;

(2) Lies on either side of the center of the guard's horizontal member; and

(3) Is 50 mm above the bottom of the guard.

(b) Test location P2 is the point on the rearmost surface of the horizontal member of the guard that:

(1) Lies in the longitudinal vertical plane passing through the center of the guard's horizontal member; and

(2) Is 50 mm above the bottom of the guard.

(c) Test location P3 is any point on the rearmost surface of the horizontal member of the guard that:

(1) Is not less than 355 mm and not more than 635 mm from the vertical longitudinal plane passing through center of the guard;

(2) Lies on either the right or left side of the horizontal member of the guard; and

(3) Is 50 mm above the bottom of the guard.

S6.5 *Positioning of Force Application Device*. Before applying any force to the guard, locate the force application device such that:

(a) The center point of the contact surface of the force application device is aligned with and touching the guard test location, as defined by the specifications of S6.4 of this section.

(b) The longitudinal axis of the force application device passes through the test location and is perpendicular to the transverse vertical plane that is tangent to the rearmost surface of the guard's horizontal member.

S6.6 *Force Application*. After the force application device has been positioned according to S6.5 of this section, apply the loads specified in S5.2.1 of this section. Load application procedures are specified in the S6.6 (a) through (d) of this section.

(a) Using the force application device, apply force to the guard in a forward direction such that the displacement rate of the force application device is the rate, plus or minus 10 percent, designated by the guard manufacturer within the range of 2.0 cm per minute to 9.0 cm per minute. If the guard manufacturer does not designate a rate, any rate within that range may be chosen.

(b) If conducting a strength test to satisfy the requirement of S5.2.1 of this section, the force is applied until the forces specified in S5.2.1 of this section have been exceeded, or until the displacement of the force application device has reached at least 125 mm, whichever occurs first.

(c) If conducting a test to be used for the calculation of energy absorption levels to satisfy the requirement of S5.2.2 of this section, apply the force to the guard until displacement of the force application device has reached 125 mm. For calculation of guard energy absorption, the value of force is recorded at least ten times per 25 mm of displacement of the contact surface of the loading device. Reduce the force until the guard no longer offers resistance to the force application device. Produce a force vs. deflection diagram of the type shown in Figure 2 of this section using this information. Determine the energy absorbed by the guard by calculating the shaded area bounded by the curve in the force vs. deflection diagram and the abscissa (X-axis).

(d) During each force application, the force application device is guided so

that it does not rotate. At all times during the application of force, the location of the longitudinal axis of the force application device remains constant.

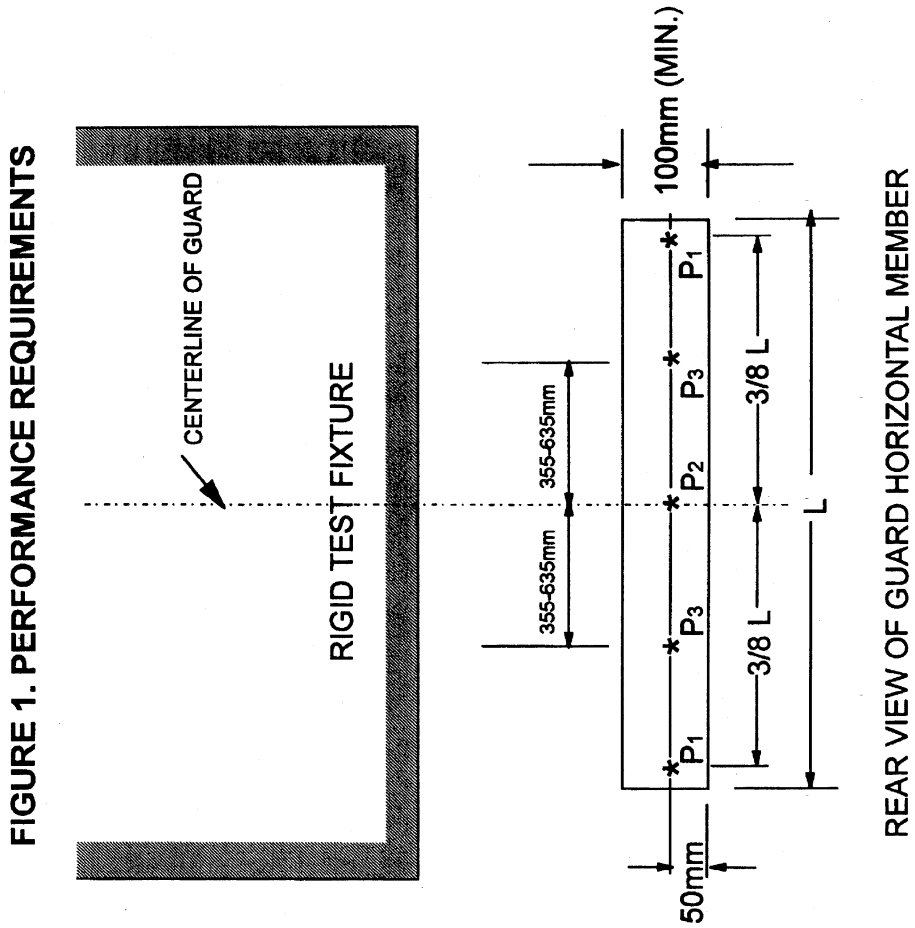

FIGURE 1. PERFORMANCE REQUIREMENTS

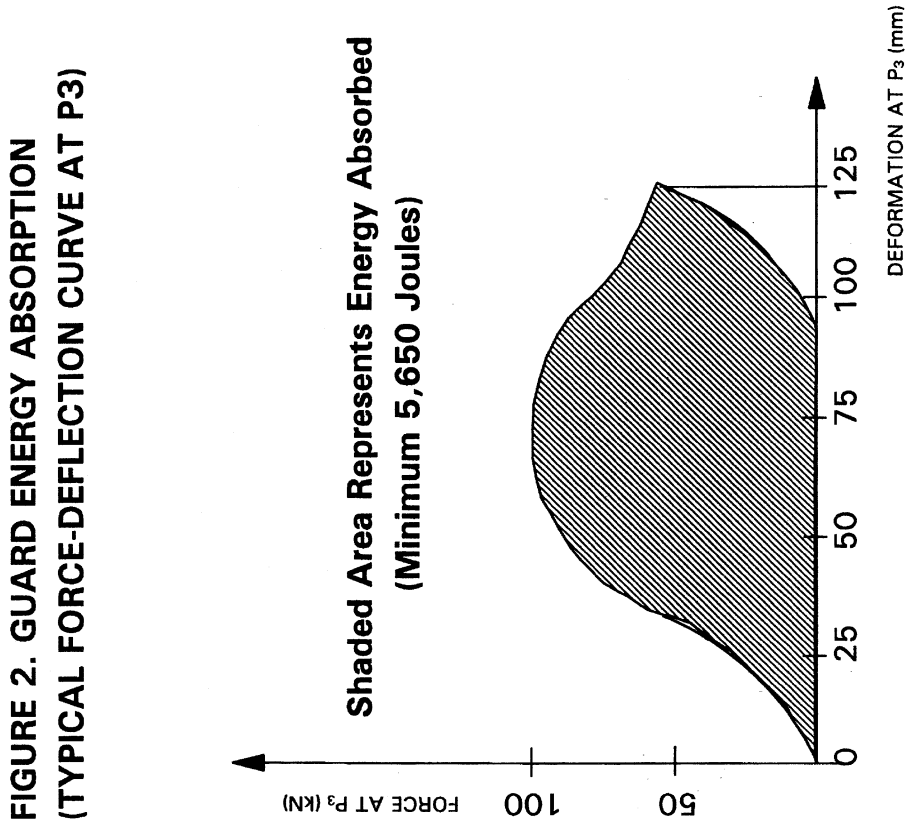

[61 FR 2030, Jan. 24, 1996, as amended at 63 FR 3662, Jan. 26, 1998; 69 FR 67662, Nov. 19, 2004]

§571.224 Standard No. 224; Rear impact protection.

S1. *Scope.* This standard establishes requirements for the installation of rear impact guards on trailers and semitrailers with a gross vehicle weight rating (GVWR) of 4,536 kg or more.

S2. *Purpose.* The purpose of this standard is to reduce the number of deaths and serious injuries occurring when light duty vehicles impact the rear of trailers and semitrailers with a GVWR of 4,536 kg or more.

S3. Application. This standard applies to trailers and semitrailers with a GVWR of 4,356 kg or more. The standard does not apply to pole trailers, pulpwood trailers, road construction controlled horizontal discharge trailers, special purpose vehicles, wheels back vehicles, or temporary living quarters as defined in 49 CFR 529.2. If a cargo tank motor vehicle, as defined in 49 CFR 171.8, is certified to carry hazardous materials and has a rear bumper or rear end protection device conforming with 49 CFR part 178 located in the area of the horizontal member of the rear underride guard required by this standard, the guard need not comply with the energy absorption requirement (S5.2.2) of 49 CFR 571.223.

S4. *Definitions.*

Chassis means the load supporting frame structure of a motor vehicle.

Horizontal member means the structural member of the guard that meets the configuration requirements of S5.1

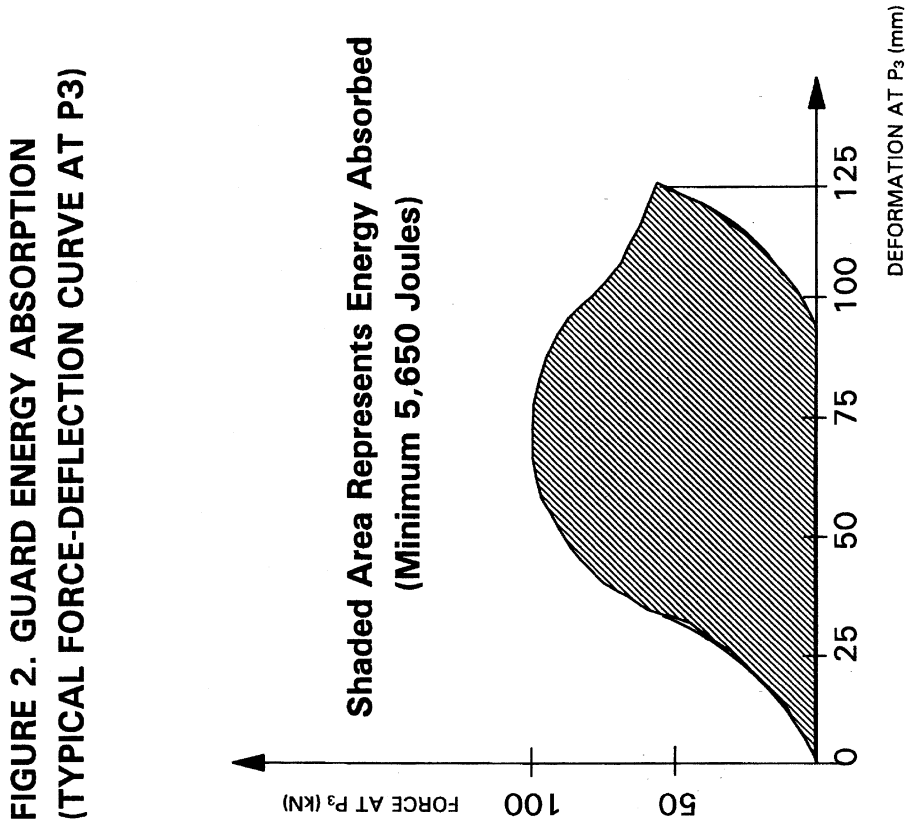

[61 FR 2030, Jan. 24, 1996, as amended at 63 FR 3662, Jan. 26, 1998; 69 FR 67662, Nov. 19, 2004]

§571.224 Standard No. 224; Rear impact protection.

S1. *Scope.* This standard establishes requirements for the installation of rear impact guards on trailers and semitrailers with a gross vehicle weight rating (GVWR) of 4,536 kg or more.

S2. *Purpose.* The purpose of this standard is to reduce the number of deaths and serious injuries occurring when light duty vehicles impact the rear of trailers and semitrailers with a GVWR of 4,536 kg or more.

S3. Application. This standard applies to trailers and semitrailers with a GVWR of 4,356 kg or more. The standard does not apply to pole trailers, pulpwood trailers, road construction controlled horizontal discharge trailers, special purpose vehicles, wheels back vehicles, or temporary living quarters as defined in 49 CFR 529.2. If a cargo tank motor vehicle, as defined in 49 CFR 171.8, is certified to carry hazardous materials and has a rear bumper or rear end protection device conforming with 49 CFR part 178 located in the area of the horizontal member of the rear underride guard required by this standard, the guard need not comply with the energy absorption requirement (S5.2.2) of 49 CFR 571.223.

S4. *Definitions.*

Chassis means the load supporting frame structure of a motor vehicle.

Horizontal member means the structural member of the guard that meets the configuration requirements of S5.1

of this section when the guard is installed on the vehicle according to the installation instructions or procedures required by S5.5 of § 571.223, Rear Impact Guards.

Low chassis vehicle means a trailer or semitrailer having a chassis that extends behind the rearmost point of the rearmost tires and a lower rear surface that meets the configuration requirements of S5.1.1 through 5.1.3 of this section.

Outer or *Outboard* means away from the trailer centerline and toward the side extremities of the trailer.

Pulpwood trailer means a trailer that is designed exclusively for harvesting logs or pulpwood and constructed with a skeletal frame with no means for attachment of a solid bed, body, or container.

Rear extremity means the rearmost point on a vehicle that is above a horizontal plane located 560 mm above the ground and below a horizontal plane located 1,900 mm above the ground when the vehicle is configured as specified in S5.1 of this section and when the vehicle's cargo doors, tailgate, or other permanent structures are positioned as they normally are when the vehicle is in motion. Nonstructural protrusions such as taillights, rubber bumpers, hinges and latches are excluded from the determination of the rearmost point.

Road construction controlled horizontal discharge trailer means a trailer or semitrailer that is equipped with a mechanical drive and a conveyor to deliver asphalt and other road building materials, in a controlled horizontal manner, into a lay down machine or paving equipment for road construction and paving operations.

Rounded corner means a guard's outermost end that curves upward or forward toward the front of the vehicle, or both.

Side extremity means the outermost point on a vehicle's side that is located above a horizontal plane 560 mm above the ground, below a horizontal plane located 190 cm above the ground, and between a transverse vertical plane tangent to the rear extremity of the vehicle and a transverse vertical plane located 305 mm forward of that plane when the vehicle is configured as specified in S5.1 of this section. Non-structural protrusions such as taillights, hinges, rubber bumpers, and latches are excluded from the determination of the outermost point.

Special purpose vehicle means a trailer or semitrailer that:

(1) Has work performing equipment that, while the vehicle is in transit, resides in or moves through any portion of the space bounded:

(i) Vertically from the ground to a horizontal plane 660 mm above the ground;

(ii) Laterally the full width of the trailer, determined by the trailer's side extremities as defined in S4 of this section; and

(iii) From the rear extremity of the trailer as defined in S4 of this section to a transverse vertical plane 305 mm forward of the rear extremity of the trailer; or

(2) Is equipped with a loading platform that, while the vehicle is in transit, is completely stowed in the space bounded by a plane tangent to the underside of the vehicle, the ground, the rear extremity of the vehicle, and the rearmost axle, and that, when operated, deploys from its stowed position to the rear of the vehicle through any portion of the space described above.

Wheels back vehicle means a trailer or semitrailer whose rearmost axle is permanently fixed and is located such that the rearmost surface of tires of the size recommended by the vehicle manufacturer for the vehicle on that axle is not more than 305 mm forward of the transverse vertical plane tangent to the rear extremity of the vehicle.

S5. *Requirements.*

S5.1 *Installation; vehicle configuration.* Each vehicle shall be equipped with a rear impact guard certified as meeting Federal Motor Vehicle Safety Standard No. 223, *Rear Impact Guards* (§ 571.223). When the vehicle to which the guard is attached is resting on level ground, unloaded, with its full capacity of fuel, and with its tires inflated and air suspension, if so equipped, pressurized in accordance with the manufacturer's recommendations, the guard shall comply with the requirements of S5.1.1 through S5.1.3 of this section. See Figure 1 of this section.

S5.1.1 *Guard width*. The outermost surfaces of the horizontal member of the guard shall extend outboard to within 100 mm of the longitudinal vertical planes that are tangent to the side extremities of the vehicle, but shall not extend outboard of those planes. See Figure 1 of this section.

S5.1.2 *Guard height*. The vertical distance between the bottom edge of the horizontal member of the guard and the ground shall not exceed 560 mm at any point across the full width of the member. Notwithstanding this requirement, guards with rounded corners may curve upward within 255 mm of the longitudinal vertical planes that are tangent to the side extremities of the vehicle. See Figure 1 of this section.

S5.1.3 *Guard rear surface*. At any height 560 mm or more above the ground, the rearmost surface of the horizontal member of the guard shall be located as close as practical to a transverse vertical plane tangent to the rear extremity of the vehicle, but no more than 305 mm forward of that plane. Notwithstanding this requirement, the horizontal member may extend rearward of the plane, and guards with rounded corners may curve forward within 255 mm of the longitudinal vertical planes that are tangent to the side extremities of the vehicle.

S5.2 *Installation Requirements*. Guards shall be attached to the vehicle's chassis by the vehicle manufacturer in accordance with the installation instructions or procedures provided pursuant to S5.5 of Standard No. 223, *Rear Impact Guards* (§571.223). The vehicle must be of a type identified in the installation instructions as appropriate for the guard.

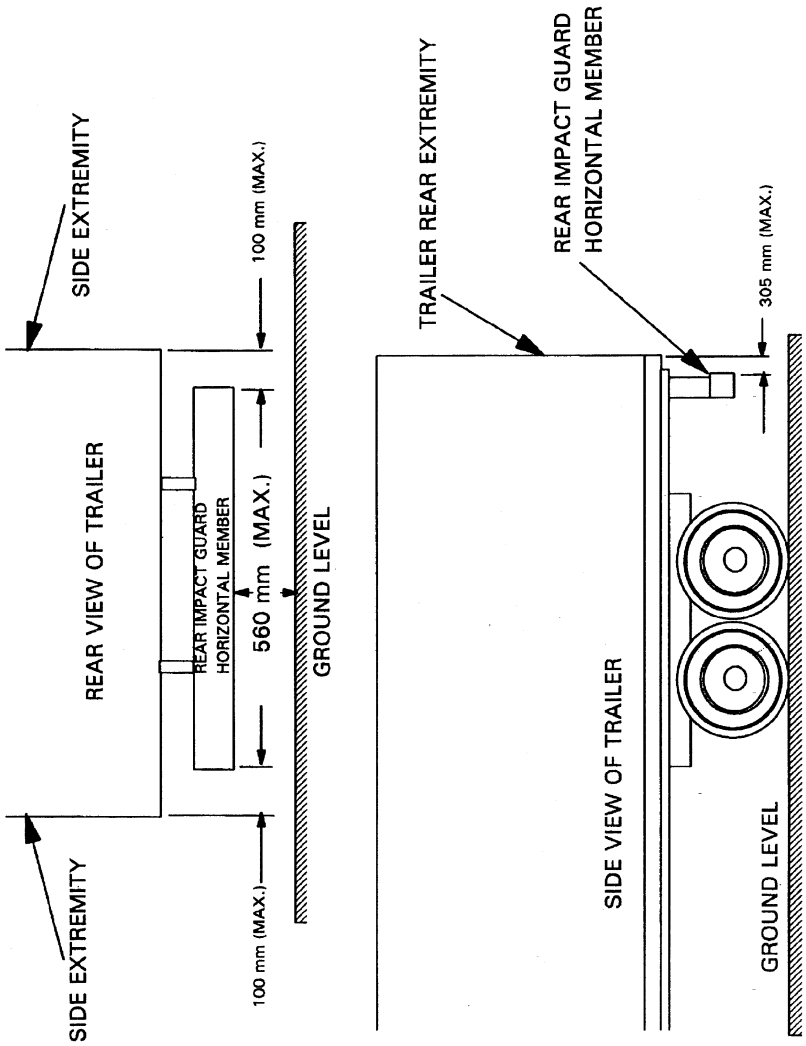

FIGURE 1. CONFIGURATION REQUIREMENTS

[61 FR 2035, Jan. 24, 1996, as amended at 63 FR 3662, Jan. 26, 1998; 69 FR 64500, Nov. 5, 2004; 69 FR 67668, Nov. 19, 2004; 71 FR 9277, Feb. 23, 2006]

§ 571.225 Standard No. 225; Child restraint anchorage systems.

S1. *Purpose and scope.* This standard establishes requirements for child restraint anchorage systems to ensure their proper location and strength for the effective securing of child restraints, to reduce the likelihood of the anchorage systems' failure, and to increase the likelihood that child restraints are properly secured and thus more fully achieve their potential effectiveness in motor vehicles.

S2. *Application.* This standard applies to passenger cars; to trucks and multipurpose passenger vehicles with a gross vehicle weight rating (GVWR) of 3,855 kilograms (8,500 pounds) or less; and to

§ 571.301 Standard No. 301; Fuel system integrity.

S1. *Scope*. This standard specifies requirements for the integrity of motor vehicle fuel systems.

S2. *Purpose*. The purpose of this standard is to reduce deaths and injuries occurring from fires that result from fuel spillage during and after motor vehicle crashes, and resulting from ingestion of fuels during siphoning.

S3. *Application*. This standard applies to passenger cars, and to multipurpose passenger vehicles, trucks and buses that have a GVWR of 4,536 kg or less and use fuel with a boiling point above 0 °C, and to school buses that have a GVWR greater than 4,536 kg and use fuel with a boiling point above 0 °C.

S4. *Definition*. *Fuel spillage* means the fall, flow, or run of fuel from the vehicle but does not include wetness resulting from capillary action.

S5. *General requirements*.

S5.1 *Passenger cars, and multipurpose passenger vehicles, trucks, and buses with a GVWR of 10,000 pounds or less*. Each passenger car and each multipurpose passenger vehicle, truck, and bus with a GVWR of 10,000 pounds or less shall meet the requirements of S6.1 through S6.4. Each of these types of vehicles that is manufactured to use alcohol fuels shall also meet the requirements of S6.6.

S5.2 [Reserved]

S5.3 [Reserved]

S5.4 *Schoolbuses with a GVWR greater than 10,000 pounds*. Each schoolbus with a GVWR greater than 10,000 pounds shall meet the requirements of S6.5. Each schoolbus with a GVWR greater than 10,000 pounds that is manufactured to use alcohol fuels shall meet the requirements of S6.6.

S5.5 *Fuel spillage; Barrier crash*. Fuel spillage in any fixed or moving barrier crash test shall not exceed 28 g from impact until motion of the vehicle has ceased, and shall not exceed a total of 142 g in the 5-minute period following cessation of motion. For the subsequent 25-minute period, fuel spillage during any 1 minute interval shall not exceed 28 g.

S5.6 *Fuel spillage; rollover*. Fuel spillage in any rollover test, from the onset of rotational motion, shall not exceed a total of 142 g for the first 5 minutes of testing at each successive 90° increment. For the remaining test period, at each increment of 90° fuel spillage during any 1 minute interval shall not exceed 28 g.

S5.7. *Alcohol fuel vehicles*. Each vehicle manufactured to operate on an alcohol fuel (e.g., methanol, ethanol) or a fuel blend containing at least 20 percent alcohol fuel shall meet the requirements of S6.6.

S6. *Test requirements*. Each vehicle with a GVWR of 4,536 kg or less shall be capable of meeting the requirements of any applicable barrier crash test followed by a static rollover, without alteration of the vehicle during the test sequence. A particular vehicle need not meet further requirements after having been subjected to a single barrier crash test and a static rollover test. Where manufacturer options are specified in this standard, the manufacturer must select an option not later than the time it certifies the vehicle and may not thereafter select a different option for that vehicle. Each manufacturer must, upon request from the National Highway Traffic Safety Administration, provide information regarding which of the compliance options it has selected for a particular vehicle or make/model.

S6.1 *Frontal barrier crash*. When the vehicle travelling longitudinally forward at any speed up to and including 48 km/h impacts a fixed collision barrier that is perpendicular to the line of travel of the vehicle, or at any angle up to 30° in either direction from the perpendicular to the line of travel of the vehicle, with 50th-percentile test dummies as specified in part 572 of this chapter at each front outboard designated seating position and at any other position whose protection system is required to be tested by a dummy under the provisions of Standard No. 208, under the applicable conditions of S7., fuel spillage shall not exceed the limits of S5.5.

S6.2 *Rear moving barrier crash*. (a) *Vehicles manufactured before September 1, 2006*. When the vehicle is impacted from the rear by the barrier specified in S7.3(a) of this standard moving at 48 km/h, with 50th percentile test dummies as specified in part 572 of this

chapter at each front outboard designated seating position, under the applicable conditions of S7, fuel spillage must not exceed the limits of S5.5.

(b) *Vehicles manufactured on or after September 1, 2006*. When the vehicle is impacted from the rear by a moving deformable barrier 80 ±1.0 km/h with a 70 percent overlap, with 50th percentile test dummies as specified in part 572 of this chapter at each front outboard designated seating position, under the applicable conditions of S7, fuel spillage must not exceed the limits of S5.5.

(c) *Small volume manufacturers*. Notwithstanding S6.2(b) of this standard, vehicles manufactured on or after September 1, 2004 and before September 1, 2008 by a manufacturer that produces fewer than 5,000 vehicles annually for sale in the United States may meet the requirements of S6.2(a). Vehicles manufactured on or after September 1, 2008 by small volume manufacturers must meet the requirements of S6.2(b).

S6.3 *Side moving barrier crash*. (a) *Vehicles manufactured before September 1, 2004*. When the vehicle is impacted laterally on either side by a barrier moving at 32 km/h with 50th percentile test dummies as specified in part 572 of this chapter at positions required for testing to Standard No. 208 (49 CFR 571.208), under the applicable conditions of S7, fuel spillage must not exceed the limits of S5.5.

(b) *Vehicles manufactured on or after September 1, 2004*. When the vehicle is impacted laterally on either side by a moving deformable barrier at 53 ± 1.0 km/h with 49 CFR part 572, subpart F test dummies at positions required for testing by S7.1.1 of Standard 214, under the applicable conditions of S7 of this standard, fuel spillage shall not exceed the limits of S5.5 of this standard.

(c)(1) Notwithstanding S6.3(b) of this standard, vehicles having a GVWR greater than 6,000 lb (2,722 kg) may meet S6.3(a) instead of S6.3(b) of this standard until September 1, 2005.

(2) Notwithstanding S6.3(b) of this standard, vehicles having a GVWR greater than 6,000 lb (2,722 kg) manufactured on or after September 1, 2005 must meet the requirements of S6.3(b) of this standard unless they are excluded from S6.3(b) under the phase-in specified in this paragraph. Excluded vehicles must meet the requirements of S6.3(a) of this standard. For vehicles having a GVWR greater than 6,000 lb (2,722 kg) manufactured on or after September 1, 2005 and before September 1, 2006, the number of vehicles complying with S6.3(b) shall be not less than 90 percent of:

(i) The manufacturer's average annual production of vehicles with a GVWR greater than 6,000 lb (2,722 kg) manufactured on or after September 1, 2002 and before September 1, 2005; or

(ii) The manufacturer's production of vehicles with a GVWR greater than 6,000 lb (2,722 kg) on or after September 1, 2004 and before September 1, 2005.

(iii) Vehicles that have a GVWR greater than 6,000 lb (2,722 kg) and that are manufactured on or after September 1, 2006 must meet the requirements of S6.3(b) of this standard.

(3) *Vehicles produced by more than one manufacturer*. For the purpose of calculating average annual production of vehicles for each manufacturer and the number of vehicles manufactured by each manufacturer under S6.3(c)(2)(i) and S6.3(c)(2)(ii) of this standard, a vehicle produced by more than one manufacturer shall be attributed to a single manufacturer as follows, subject to S6.3(c)(4).

(i) A vehicle which is imported shall be attributed to the importer.

(ii) A vehicle manufactured in the United States by more than one manufacturer, one of which also markets the vehicle, shall be attributed to the manufacturer that markets the vehicle.

(4) A vehicle produced by more than one manufacturer shall be attributed to any one of the vehicle's manufacturers specified by an express written contract, reported to the National Highway Traffic Safety Administration under 49 CFR 568.6, between the manufacturer so specified and the manufacturer to which the vehicle would otherwise be attributed under S6.3(c)(3).

(d) Notwithstanding S6.3(b) of this standard, vehicles with a GVWR of 6,000 lb (2,722 kg) or less that are manufactured in two or more stages or altered (within the meaning of 49 CFR 567.7) after having been previously certified in accordance with Part 567 of this chapter may meet S6.3(a) of this

standard until September 1, 2005. Vehicles with a GVWR of 6,000 lb (2,722 kg) or less that are manufactured in two or more stages or altered (within the meaning of 49 CFR 567.7) after having been previously certified in accordance with Part 567 of this chapter and that are manufactured on or after September 1, 2005 must meet the requirements of S6.3(b)

(e) Notwithstanding S6.3(b) and (c) of this standard, vehicles with a GVWR greater than 6,000 lb (2,722 kg) that are manufactured in two or more stages or altered (within the meaning of 49 CFR 567.7) after having been previously certified in accordance with Part 567 of this chapter may meet S6.3(a) of this standard until September 1, 2006. Vehicles with a GVWR greater than 6,000 lb (2,722 kg) that are manufactured in two or more stages or altered (within the meaning of 49 CFR 567.7) after having been previously certified in accordance with Part 567 of this chapter and that are manufactured on or after September 1, 2006 must meet the requirements of S6.3(b).

S6.4 *Static rollover*. When the vehicle is rotated on its longitudinal axis to each successive increment of 90°, following an impact crash of S6.1, S6.2, or S6.3, fuel spillage shall not exceed the limits of S5.6.

S6.5 *Moving contoured barrier crash*. When the moving contoured barrier assembly traveling longitudinally forward at any speed up to and including 48 km/h impacts the test vehicle (school bus with a GVWR exceeding 4,536 kg) at any point and angle, under the applicable conditions of S7.1 and S7.5, fuel spillage shall not exceed the limits of S5.5.

S6.6 *Anti-siphoning test for alcohol fuel vehicles*. Each vehicle shall have means that prevent any hose made of vinyl plastic or rubber, with a length of not less than 1200 millimeters (mm) and an outside diameter of not less than 5.2 mm, from contacting the level surface of the liquid fuel in the vehicle's fuel tank or fuel system, when the hose is inserted into the filler neck attached to the fuel tank with the fuel tank filled to any level from 90 to 95 percent of capacity.

S7. *Test conditions*. The requirements of S5.1 through S5.6 and S6.1 through S6.5 shall be met under the following conditions. Where a range is specified, the vehicle must be capable of meeting the requirements at all points within the range.

S7.1 *General test conditions*. The following conditions apply to all tests.

S7.1.1 The fuel tank is filled to any level from 90 to 95 percent of capacity with Stoddard solvent, having the physical and chemical properties of type 1 solvent, Table I ASTM Standard D484–71, ''Standard Specifications for Hydrocarbon Dry Cleaning Solvents.''

S7.1.2 The fuel system other than the fuel tank is filled with Stoddard solvent to its normal operating level.

S7.1.3 In meeting the requirements of S6.1 through S6.3, if the vehicle has an electrically driven fuel pump that normally runs when the vehicle's electrical system is activated, it is operating at the time of the barrier crash.

S7.1.4 The parking brake is disengaged and the transmission is in neutral, except that in meeting the requirements of S6.5 the parking brake is set.

S7.1.5 Tires are inflated to manufacturer's specifications.

S7.1.6 The vehicle, including test devices and instrumentation, is loaded as follows:

(a) Except as specified in S7.1.1, a passenger car is loaded to its unloaded vehicle weight plus its rated cargo and luggage capacity weight, secured in the luggage area, plus the necessary test dummies as specified in S6., restrained only by means that are installed in the vehicle for protection at its seating position.

(b) Except as specified in S7.1.1, a multipurpose passenger vehicle, truck, or bus with a GVWR of 4,536 kg or less is loaded to its unloaded vehicle weight, plus the necessary test dummies as specified in S6, plus 136 kg or its rated cargo and luggage capacity weight, whichever is less, secured in the load carrying area and distributed as nearly as possible in proportion to its GAWR. For the purpose of this standard, unloaded vehicle weight does not include the weight of work-performing accessories. Each dummy is restrained only by means that are installed in the vehicle for protection at its seating position.

(c) Except as specified in S7.1.1, a school bus with a GVWR greater than 4,536 kg is loaded to its unloaded vehicle weight, plus 54 kg of unsecured mass at each designated seating position.

S7.2 *Side moving barrier test conditions.* (a) *Vehicles manufactured before September 1, 2004.* The side moving barrier crash test conditions are those specified in S8.2 of Standard No. 208 (49 CFR 571.208).

(b) *Vehicles manufactured on or after September 1, 2004.* The side moving deformable barrier crash test conditions are those specified in S8 of Standard 214 (49 CFR 571.214).

S7.3 *Rear moving barrier test conditions.* (a) *Vehicles manufactured before September 1, 2006.* The rear moving barrier test conditions are those specified in S8.2 of Standard No. 208 (49 CFR 571.208), except for the positioning of the barrier and the vehicle. The barrier and test vehicle are positioned so that at impact—

(1) The vehicle is at rest in its normal attitude;

(2) The barrier is traveling at 48 km/h with its face perpendicular to the longitudinal centerline of the vehicle; and

(3) A vertical plane through the geometric center of the barrier impact surface and perpendicular to that surface coincides with the longitudinal centerline of the vehicle.

(b) *Vehicles manufactured on or after September 1, 2006.* The rear moving deformable barrier is the same as that shown in Figure 2 of Standard No. 214 (49 CFR 571.214) and specified in 49 CFR part 587, except as otherwise specified in paragraph S7.3 (b). The barrier and test vehicle are positioned so that at impact—

(1) The vehicle is stationary;

(2) The deformable face of the barrier is mounted on the barrier 50 mm (2 inches) lower than the height from the ground specified in Figure 2 of Standard No. 214 (49 CFR 571.214) (All dimensions from the ground in Figure 2, Front View should be reduced by 50 mm (2 inches.));

(3) The barrier is traveling 80 ±1.0 km/h; and

(4) The barrier impacts the test vehicle with the longitudinal centerline of the vehicle parallel to the line of travel and perpendicular to the barrier face within a tolerance of ±5 degrees. The test vehicle and barrier face are aligned so that the barrier strikes the rear of the vehicle with 70 percent overlap toward either side of the vehicle. So aligned, the barrier face fully engages one half of the rear of the vehicle and partially engages the other half. At impact, the vehicle's longitudinal centerline is located inboard either of the side edges of the barrier by a distance equal to 20 percent of the vehicle's width ±50 mm (*see* Figure 3). The vehicle's width is the maximum dimension measured across the widest part of the vehicle, including bumpers and molding, but excluding such components as exterior mirrors, flexible mud flaps, marker lamps, and dual rear wheel configurations.

S7.4 *Static rollover test conditions.* The vehicle is rotated about its longitudinal axis, with the axis kept horizontal, to each successive increment of 90°, 180°, and 270° at a uniform rate, with 90° of rotation taking place in any time interval from 1 to 3 minutes. After reaching each 90° increment the vehicle is held in that position for 5 minutes.

S7.5 *Moving contoured barrier test conditions.* The following conditions apply to the moving contoured barrier crash test.

S7.5.1 The moving barrier, which is mounted on a carriage as specified in Figure 1, is of rigid construction, symmetrical about a vertical longitudinal plane. The contoured impact surface, which is 629 mm high and 1,981 mm wide, conforms to the dimensions shown in Figure 2, and is attached to the carriage as shown in that figure. The ground clearance to the lower edge of the impact surface is 133 mm ±13 mm. The wheelbase is 3,048 mm ±50 mm.

S7.5.2 The moving contoured barrier, including the impact surface, supporting structure, and carriage, has a mass of 1,814 kg ±23 kg with the mass distributed so that 408 kg ±11 kg is at each rear wheel and 499 kg ±11 kg is at each front wheel. The center of gravity is located 1,372 mm ±38 mm rearward of the front wheel axis, in the vertical

longitudinal plane of symmetry, 401 mm ±13 mm above the ground.

S7.5.3 The moving contoured barrier has a solid nonsteerable front axle and fixed rear axle attached directly to the frame rails with no spring or other type of suspension system on any wheel. (The moving barrier assembly is equipped with a braking device capable of stopping its motion.)

S7.5.4 The concrete surface upon which the vehicle is tested is level, rigid, and of uniform construction, with a skid number of 75 when measured in accordance with American Society of Testing and Materials Method E: 274–65T at 64 km/h, omitting water delivery as specified in paragraph 7.1 of that method.

S7.5.5 The barrier assembly is released from the guidance mechanism immediately prior to impact with the vehicle.

S7.6 The moving barrier assemblies specified in S7.2, S7.3 and S7.5 are equipped with P205/75R15 pneumatic tires inflated to 200 kPa ±21 kPa.

S8 *Phase-In schedule.*

S8.1 *Rear impact test upgrade.* (a) *Vehicles manufactured on or after September 1, 2006 and before September 1, 2007.* For vehicles manufactured on or after September 1, 2006, and before September 1, 2007, the number of vehicles complying with S6.2(b) of this standard must not be less than 40 percent of:

(1) The manufacturer's average annual production of vehicles manufactured on or after September 1, 2004, and before September 1, 2007; or

(2) The manufacturer's production on or after September 1, 2006, and before September 1, 2007.

(b) *Vehicles manufactured on or after September 1, 2007 and before September 1, 2008.* For vehicles manufactured on or after September 1, 2007 and before September 1, 2008, the number of vehicles complying with S6.2(b) of this standard must not be less than 70 percent of:

(1) The manufacturer's average annual production of vehicles manufactured on or after September 1, 2005, and before September 1, 2008; or

(2) The manufacturer's production on or after September 1, 2007, and before September 1, 2008.

(c) *Vehicles manufactured on or after September 1, 2008.* For vehicles manufactured on or after September 1, 2008, the number of vehicles complying with S6.2(b) of this standard must be 100 percent of the manufacturer's production during that period.

S8.2 *Vehicles manufactured in two or more stages.* A final stage manufacturer or alterer may, at its option, comply with the requirements set forth in S8.2.1 and S8.2.2.

S8.2.1 Vehicles manufactured on or after September 1, 2006 and before September 1, 2009 are not required to comply with the requirements specified in S6.2(b) of this standard.

S8.2.2 Vehicles manufactured on or after September 1, 2009 must comply with the requirements specified in S6.2(b) of this standard.

S8.3 *Vehicles produced by more than one manufacturer.*

S8.3.1 For the purpose of calculating average annual production of vehicles for each manufacturer and the number of vehicles manufactured by each manufacturer under S8.1, a vehicle produced by more than one manufacturer must be attributed to a single manufacturer as follows, subject to S8.3.2:

(a) A vehicle that is imported must be attributed to the importer.

(b) A vehicle manufactured in the United States by more than one manufacturer, one of which also markets the vehicle, must be attributed to the manufacturer that markets the vehicle.

S8.3.2 A vehicle produced by more than one manufacturer must be attributed to any one of the vehicle's manufacturers specified by an express written contract, reported to the National Highway Traffic Safety Administration under 49 CFR part 586, between the manufacturer so specified and the manufacturer to which the vehicle would otherwise be attributed under S8.3.1.

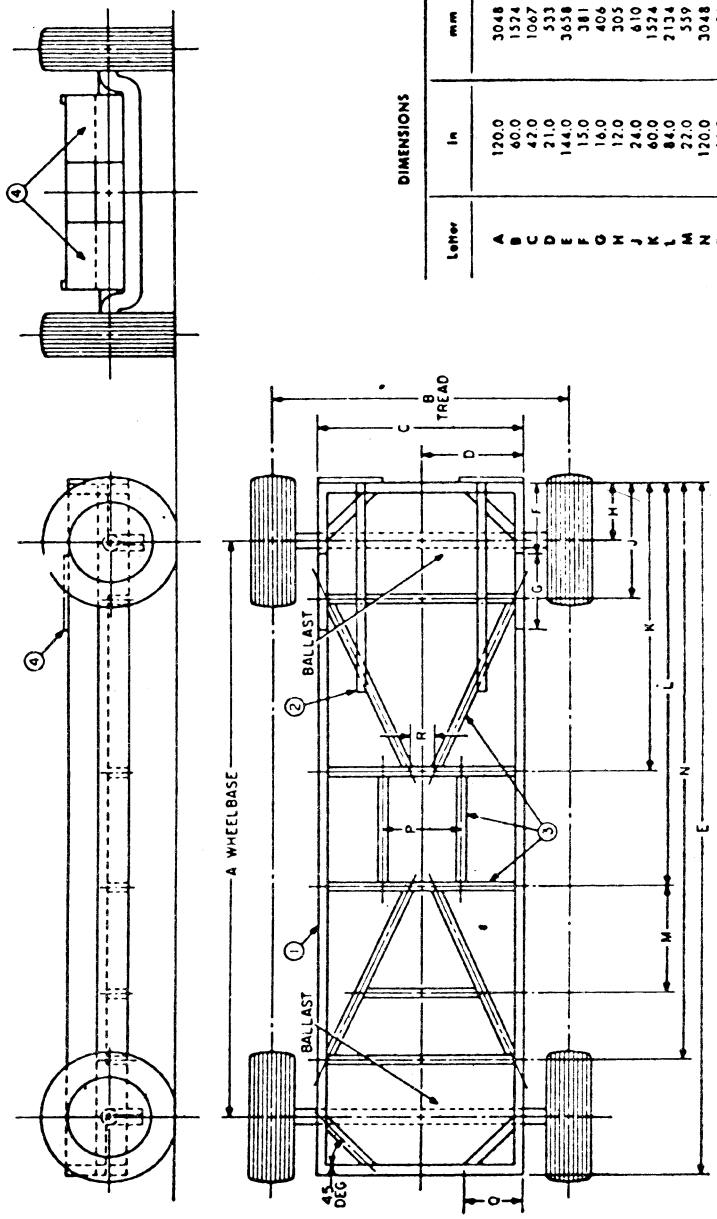

DIMENSIONS

Letter	In	mm
A	120.0	3048
B	60.0	1524
C	42.0	1067
D	21.0	533
E	144.0	3658
F	15.0	381
G	16.0	406
H	12.0	305
J	24.0	610
K	60.0	1524
L	84.0	2134
M	22.0	559
N	120.0	3048
P	16.0	406
Q	12.0	305
R	6.0	152

NOTES:
1. OUTER FRAME 6.0 × 2.0 × 0.19 IN (152 × 51 × 5 mm) STEEL TUBING, TWO PIECES WELDED TOGETHER FOR A 12.0 IN (305 mm) HEIGHT.
2. BALLAST TIE DOWNS.
3. ALL INNER REINFORCEMENTS AND FRAME GUSSETS OF 4.0 × 2.0 × 0.19 IN (102 × 51 × 5 mm) STEEL TUBING.
4. REINFORCED AREAS FOR BOLTING ON FACE PLATES.

FIG. 1—COMMON CARRIAGE FOR MOVING BARRIERS

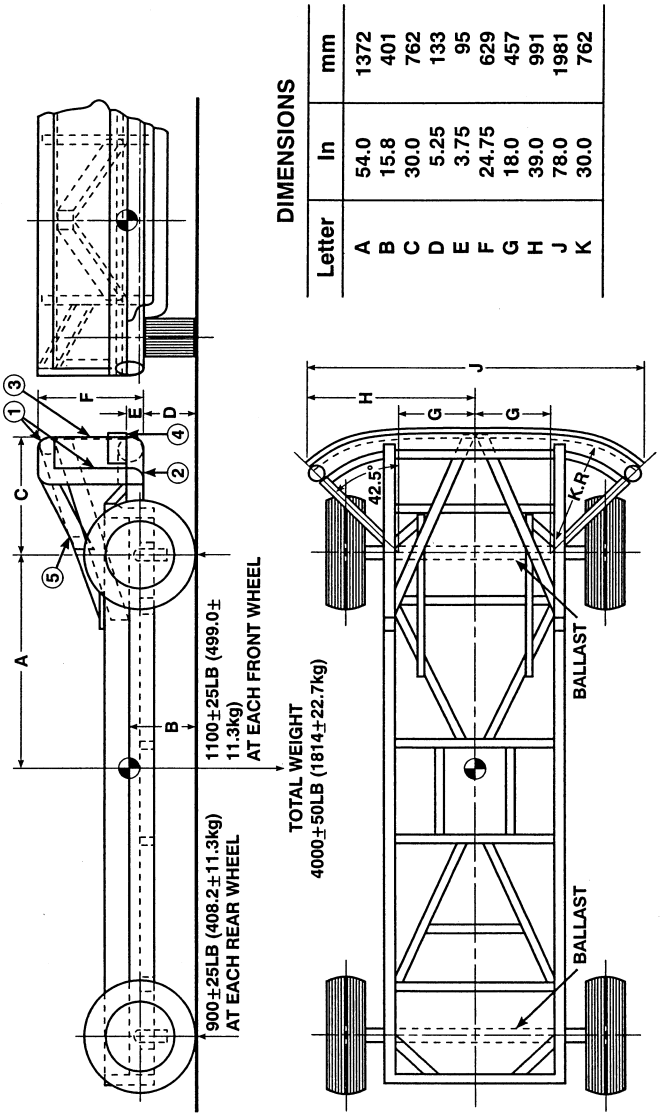

DIMENSIONS

Letter	In	mm
A	54.0	1372
B	15.8	401
C	30.0	762
D	5.25	133
E	3.75	95
F	24.75	629
G	18.0	457
H	39.0	991
J	78.0	1981
K	30.0	762

NOTES:

1. UPPER FRAME 4.0 IN DIA X 0.25 IN WALL (102 mm DIA X 6 mm WALL) STEEL TUBING (THREE SIDES).
2. LOWER FRAME 6.0 IN DIA X 0.50 IN WALL (152 mm DIA X 13 mm WALL) STEEL TUBING.
3. FACE PLATE 0.75 IN (19 mm) THICK COLD ROLLED STEEL.
4. LEADING EDGE 1.0 X 4.0 IN (25 X 102 mm) STEEL BAND, SHARP EDGES BROKEN.
5. ALL INNER REINFORCEMENTS 4.0 X 2.0 X 0.19 IN (102 X 51 X 5 mm) STEEL TUBING.

Fig. 2 – Common Carriage with Contoured Impact Surface Attached

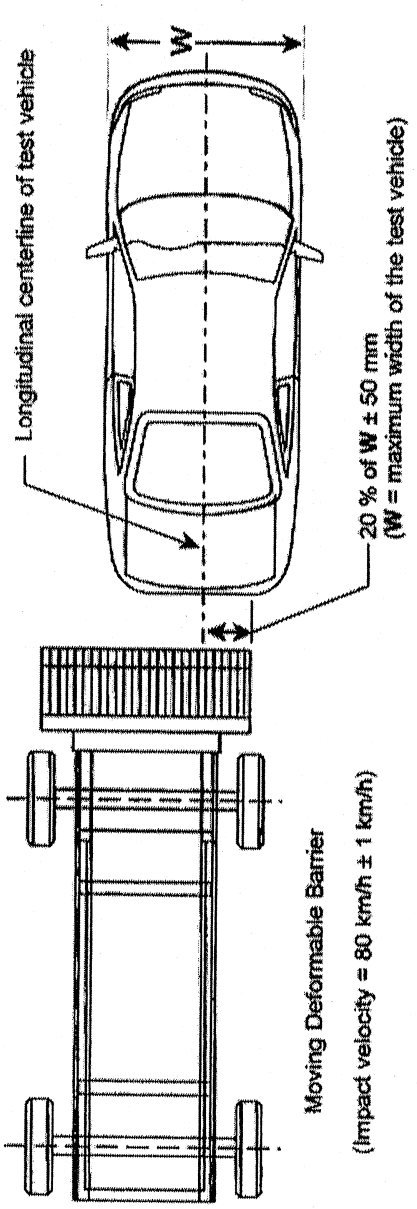

FIGURE 3 – MOVING DEFORMABLE BARRIER REAR IMPACT - 70 % OVERLAP

[40 FR 48353, Oct. 15, 1975. Redesignated and amended at 41 FR 9350, Mar. 4, 1976; 41 FR 36026, 36027, Aug. 26, 1976; 53 FR 8204, Mar. 14, 1988; 53 FR 49990, Dec. 13, 1988; 58 FR 5638, Jan. 22, 1993; 61 FR 19202, May 1, 1996; 63 FR 28953, May 27, 1998; 68 FR 44471, 44472, July 29, 2003; 68 FR 67083, Dec. 1, 2003; 69 FR 6583, Feb. 11, 2004; 69 FR 51398, Aug. 19, 2004; 70 FR 46434, Aug. 10, 2005; 72 FR 51972, Sept. 11, 2007; 72 FR 62141, Nov. 2, 2007]